Cylinder Ironer

300 mm Diameter

Installation/Operation/Maintenance

FWF2410N_SVG

Original Instructions
Keep These Instructions for Future Reference.
CAUTION: Read the instructions before using the machine.
(If this machine changes ownership, this manual must accompany machine.)

Alliance™ Laundry Systems

www.alliancelaundry.com

Part No. D1678ENR5
December 2019

Safety Information

General Warnings

CAUTION

Failure to observe the following safety instructions can lead to serious injury.

W1007

IMPORTANT: Read these instructions for use and maintenance before proceeding with the installation, use, and maintenance of the machine.

IMPORTANT: Keep this identification and warning manual near the machine for future reference.

- Comply with and apply the regulations in force in the country of installation.
- The machine must only be used by trained, informed, and instructed persons.
- Read and understand instructions before attempting to operate the machine. Improper use of the machine may cause a risk of fire, electric shock, or serious body injuries and/or death, and serious damage to the machine and environment.
- Any other use that is not explicitly indicated in this manual must be considered dangerous. The manufacturer cannot be held liable for damage deriving from any improper use, or in any case not taken into account in this manual.
- The machine cannot be used by children who are younger than 14 years. The machine can be used by older children and people with reduced physical, sensory or mental capabilities, or lacking experience or necessary knowledge, provided they are supervised or have received instructions for the safe use of the appliance and understand the dangers associated with it. Children must not play with the machine. Cleaning and maintenance meant to be performed by the user must not be performed by children.
- The safety standards and warnings for operating personnel, contained in the instructions, must be printed and made available in a visible place near the machine.
- Comply with standards in force for the connection to the electrical mains, in compliance with the local distribution system (TT, TN, IT, ...). It may not always be possible to connect systems in the standard version to the IT electricity networks. Contact the manufacturer.
- All types of machines are manufactured according to the Directive on Electromagnetic Compatibility (EMC). They can be used only in the spaces corresponding to the appliance class of electromagnetic compatibility (conform at least to Class A - industrial environment). For safety reasons, please comply with the minimum safe distance from electrical or sensitive electronic systems.
- Do not change the setting of the frequency inverter parameters. This can cause serious injury, fire, damage, etc.
- During transport and storage do not exert excessive pressure on the packaging as the machine components located along the packaging edges may be damaged.
- Use only copper conductors. The appliance must be connected to a power supply circuit to which no lighting units or general use equipment are connected.
- Any installation changes must be approved by the manufacturer. Otherwise, the manufacturer will not be responsible for any damage to the appliance and/or injury to operators.
- During use, cleaning, and maintenance, do not get close to the moving parts of the appliance, such as motors, belts, fans, and transmission components with body parts or tools.
- The use of hypochlorite causes corrosion that may cause breakage or deterioration of the machine components.
- The appliance warranty does not cover damages caused by the use of chlorine, its derivatives, or substances that can release chlorine during normal use.
- Incorrect amounts of detergent or additives during treatment may reduce the durability and performance of the appliance.
- Make sure that in the installation location there is no possibility that the machine will be exposed to direct or indirect water jets.
- The machine has not been designed for operation in explosive atmospheres and/or with such products.
- Do not expose the appliance to the elements, excessively high or low temperatures, or humidity.
- Mark the danger zone in the laundry room and hinder access when the machine is in operation. Keep the surface of the machine and the surrounding area clean. Keep the machine away from flammable materials.
- Do not tamper with the controls of the machine and do not ignore the safety warnings.
- In case of danger, turn off the main switch and/or use other emergency disconnecting devices.
- Do not use the machine if it has broken or missing parts, and/or with lids/guards open. Correctly restore fixed guards before using the machine.
- The machine must not be stored, installed, or exposed to the elements, low or high temperatures, or humidity levels. Do not wet the machine. Completely dry the machine, both internally and externally, before connecting to the electrical mains.
- Disconnect the power supply, turn off the water, gas, and steam supply and any other supply sources before cleaning and maintenance, as well as at the end of each working day.
- Do not repair, replace parts, or attempt any intervention unless specifically recommended in this manual and/or if you do not have the skills to perform them. Only qualified personnel may disassemble the machine for maintenance.

- Assembly and adjustment must be carried out by qualified technicians, authorized by the manufacturer. Incorrect installation and improper adjustment may create hazardous conditions.
- Any water, condensate, steam leak or similar must be repaired immediately.
- Should problems or faults occur, contact the manufacturer or the authorized service center.
- The manufacturer reserves the right to change the manuals without notice.
- If the machine is located in a self-service laundry, an emergency stop device must be installed inside the laundry room. The emergency stop device must be positioned in a visible place, accessible to all users. For the installation in a self-service environment, refer to standards in force. Install sufficient stop devices so that at least one is visible from any position inside the operator access area. Each device is to be positioned within 8 m (~312 ft) of the operator's workstations. If this device consists of an emergency stop button, this must be placed at a height above the ground or the work platform between 700 mm (27 in) and 1700 mm (67in).
- When replacing parts, use original spare parts or equivalent ones approved by the manufacturer. See the Technical Appendix for ordering.
- To minimize the risk of fire, electric shock, or injury, the machine must be properly earthed.
- Even if the main switch of the appliance is set to "OFF", the power supply clamps of the switch are always live.
- Wait at least 10 minutes before performing maintenance on the device after disconnection from all power (electric, thermal, and similar) supplies. Before performing maintenance on the frequency inverter, check that the residual voltage thereof is less than 30VDC.
- Do not remove the safety signs applied to the machine. Observe the signs to avoid personal injury. Make sure the safety system signs remain legible.
- Pay special attention to use and maintenance operations, especially for those machines that usually treat fabrics coming from with high concentrations of bacteria (hospitals, nursing homes, and similar).

Ironer Warnings

- The machine has been designed for ironing fabrics. Other objects can damage the machine and cause damage or injury.
- Do not wear garments that could get caught, such as ties, scarves, large sleeves. Entanglement hazard!
- Do not feed into the ironer or attempt to iron cloths that are sensitive to high heat: The fabric can deteriorate, causing fire and an intoxication hazard!
- Do not iron garments that are thicker than 5/16 in [8 mm]. The excessive thickness can damage the machine and cause entanglements.
- Do not attempt to iron garments that contain more humidity than that set in the technical data.
- Do not iron fabrics with buttons, pins, metal clips, zips, buckles or similar. These will immediately damage the ironing basin.
- Do not iron dry garments, this is a fire hazard!
- Do not iron garments that are not meant for this type of treatment and do not attempt to iron fabrics with an irregular shape or with uneven or undefined edges.
- Do not leave garments inserted or entangled in the stopped ironer: this is a fire hazard! In case of failure or power cut, release the garments from the ironing plate as described in the manual.
- Do not cover the ironer or machine aeration grids, even at the end of ironing! The machine takes time to cool and the residual heat of the machine can pose a fire hazard!
- Do not let the machine run unattended with the heating turned on. Turn off the machine and heating if not in use.
- The ironed, hot, and dry garments are charged with static electricity: adjust the appliance temperature and cloth humidity so as to minimize the effect.
- If garments are excessively dry, they tend to adhere and wind around the roller, creating a spiral. Lift the basin, turn off the heating, wait for the appliance to cool, and remove fabrics wrapped or entangled. Fire and burn hazard!
- Only iron garments that have been previously well rinsed with soft water. Excessive salt content in water causes a quick formation of scale deposits on the surface of the ironing plate, which deteriorates machine performance and makes feeding linen difficult.
- Thoroughly rinse the garments before introducing them in the ironer. Do not feed garments into the machine that still have traces of flammable substances, solvents or other chemical compounds, or derivatives from treatments, which could degrade or catch fire in contact with the ironing plate. Fire or intoxication hazard!
- The handling of moist garments for several hours per day can cause irritation to the skin. Use appropriate protection devices (gloves or similar).
- Connect and vent the exhausted fumes outside of the building. Steams from ironing, even if they are not toxic, lead to the creation of a moist and unhealthy environment.
- Use the entire surface of the ironing roller by varying the areas used during the cycle. The use of the machine in the same ironing area leads to a quick degradation of the roller cover as well as an overheating of the ironing plate in the unused area. Fire hazard!
- Garments are particularly hot at the machine outlet and, in certain cases, can still contain residual humidity: this is a burn hazard!
- The outlet edge of the ironing basin is as hot as the ironing temperature. Burn hazard during the withdrawal of treated garments!
- The ironing basin is hot even when it is detached from the roller and in home position: do not put hands or objects other than treated fabrics between basin and roller. Burn injury hazard!

- Check that the ironing parameters are appropriate and compatible with those shown on the label of the fabric to be treated. An incorrect temperature can pose the risk of fire!
- Do not iron material with synthetic seams, printed drawings or plastic parts. If this cannot be avoided, adjust the temperature according to the most delicate material to be treated (the material with the lowest ironing temperature).
- Start ironing only when the desired temperature is reached and displayed. Since the machine takes some minutes to reach the desired temperature, we recommend dividing garments according to their type.
- Do not place hands or fingers between the ironing plate and the roller while the ironing plate comes down: this is a serious burn hazard!
- Do not steam flammable substances on the ironing plate or close to the ironer.
- Do not keep liquids or other flammable materials close to the machine. Dry garments are generally considered flammable.
- Keep the machine clean, removing possible traces of down or parts of fabric from the machine. Perform cleaning only while the appliance is turned off, disconnected, and cold.
- Keep products required to wax the basin away from the machine.
- Due to the danger of fire in the laundry, provide the work area with suitable fire extinguishers.

Requirements for Safe Operation

- Only allow properly trained personnel to operate the machine.
- Do not use the machine improperly, i.e. for uses other than those specified in .
- Do not allow the machine to be used by children, people with limited physical and mental abilities, and/or personnel not yet trained without proper supervision.
- Do not remove or bypass safety devices.
- Never use water jets directly or indirectly on the machine.
- Do not run the machine if it has defective or missing parts, or if the side panels have been removed.
- At the end of each working shift, cut out all electric and heating supply sources (e.g. gas, if present).
- In case of malfunctions, alarms, or defects contact the after sales center.

Prohibitions

- Do not touch the machine with wet hands or feet.
- Do not use the machine barefoot.
- Do not leave the machine exposed to weather agents (rain, sea salt, etc...).
- Do not smoke close to the machine during use.
- Do not touch the water or steam pipes (if present) even when the machine is not running.
- Do not treat garments that carry the "hand wash only" or relative symbol care label.
- Do not use hypochlorite (bleach), as it may oxidize some parts of the machine (electric, electronic, or metallic).
- Do not expose the machine to the elements, excessively high or low temperatures, or humidity.
- Do not store flammable materials near the machine.
- Do not add petrol, detergents for dry cleaning, or other flammable or explosive substances to the machine. These substances release vapors that may cause fires or explosions.
- Do not store materials of any type near the machine.

Table of Contents

Introduction

General Considerations

Comply with all operating and maintenance instructions and recommendations described in this manual.

For better results, the manufacturer recommends performing cleaning and maintenance operations regularly to keep the machine in the best condition.

It is essential to train the personnel in charge of running, performing maintenance on, and inspecting the machine in compliance with the operating procedures and safety standards indicated in this user manual.

Remember that the manufacturer is always available to provide clarifications or further information.

Modifications and Updates

If the machine needs any changes or functional replacements, the manufacturer will review and update the instructions. The manufacturer is responsible for delivering the updated instructions. The user must make sure that if this document is changed by the manufacturer, only the updated versions of the instructions for use and maintenance are actually available at the points of use. The manufacturer reserves the right to change, correct, or update this manual without notice.

Support and Availability

If needed, instructions are available on the manufacturer's website or can be directly requested from the manufacturer.

IMPORTANT: Read these instructions for use and maintenance before proceeding with the installation and use of the machine.

Replacement Parts

If literature or replacement parts are required, contact the source from which the machine was purchased or contact Alliance Laundry Systems at +1(920)748-3950 for the name and address of the nearest authorized parts distributor.

Customer Service

For technical assistance, contact your local distributor or contact:

Alliance Laundry Systems

Shepard Street

P.O. Box 990

Ripon, Wisconsin 54971-0990

U.S.A.

www.alliancelaundry.com

Phone: +1(920)748-3121

Ripon, Wisconsin

Model Identification

Information in this manual is applicable to these models:

I30-160	I30-160AV	I30-200	I30-200AV
NRI16030ME	NRI20030	RIC316MN0F2I	RIC316MN0F2L
RIC316MN0F2P	RIC316MN0F2S	RIC316MN0F2U	RIC316MN0F3I
RIC316MN0F3L	RIC316MN0F3P	RIC316MN0F3S	RIC316MN0F3U
RIC316MN0F5I	RIC316MN0F5L	RIC316MN0F5P	RIC316MN0F5S
RIC316MN0F5U	RIC316MN0FLI	RIC316MN0FLL	RIC316MN0FLP
RIC316MN0FLS	RIC316MN0FLU	RIC316MN0FMI	RIC316MN0FML
RIC316MN0FMP	RIC316MN0FMS	RIC316MN0FMU	RIC316MN0FRI
RIC316MN0FRL	RIC316MN0FRP	RIC316MN0FRS	RIC316MN0FRU
RIC316MN0V2I	RIC316MN0V2L	RIC316MN0V2P	RIC316MN0V2S
RIC316MN0V2U	RIC316MN0V3I	RIC316MN0V3L	RIC316MN0V3P

Table continues...

RIC316MN0V3S	RIC316MN0V3U	RIC316MN0V5I	RIC316MN0V5L
RIC316MN0V5P	RIC316MN0V5S	RIC316MN0V5U	RIC316MN0VLI
RIC316MN0VLL	RIC316MN0VLP	RIC316MN0VLS	RIC316MN0VLU
RIC316MN0VMI	RIC316MN0VML	RIC316MN0VMP	RIC316MN0VMS
RIC316MN0VMU	RIC316MN0VRI	RIC316MN0VRL	RIC316MN0VRP
RIC316MN0VRS	RIC316MN0VRU	RIC320MN0V2I	RIC320MN0V2L
RIC320MN0V2P	RIC320MN0V2S	RIC320MN0V2U	RIC320MN0V3I
RIC320MN0V3L	RIC320MN0V3P	RIC320MN0V3S	RIC320MN0V3U
RIC320MN0V5I	RIC320MN0V5L	RIC320MN0V5P	RIC320MN0V5S
RIC320MN0V5U	RIC320MN0VLI	RIC320MN0VLL	RIC320MN0VLP
RIC320MN0VLS	RIC320MN0VLU	RIC320MN0VMI	RIC320MN0VML
RIC320MN0VMP	RIC320MN0VMS	RIC320MN0VMU	RIC320MN0VRI
RIC320MN0VRL	RIC320MN0VRP	RIC320MN0VRS	RIC320MN0VRU

Machine Versions

The machine version is specified in the model field on the serial plate. Refer to *Table 1* to identify the commercial names of the machine.

Pos. 1	Pos. 2	Pos. 3	Pos. 4	Pos. 5
Type	**Roller Diameter (cm)**	**Roller Length (cm)**	**Fume Extractor**	**Speed Adjuste-ment**
I Ironer	30	160-200	A	V

Table 1

Location of Serial Plate

The serial plate (or CE plate) bearing the identification data and CE mark is permanently attached on the rear side of the machine.

A plate bearing the identification data and the weight of the machine is also applied to the packaging. Refer to *Figure 1* .

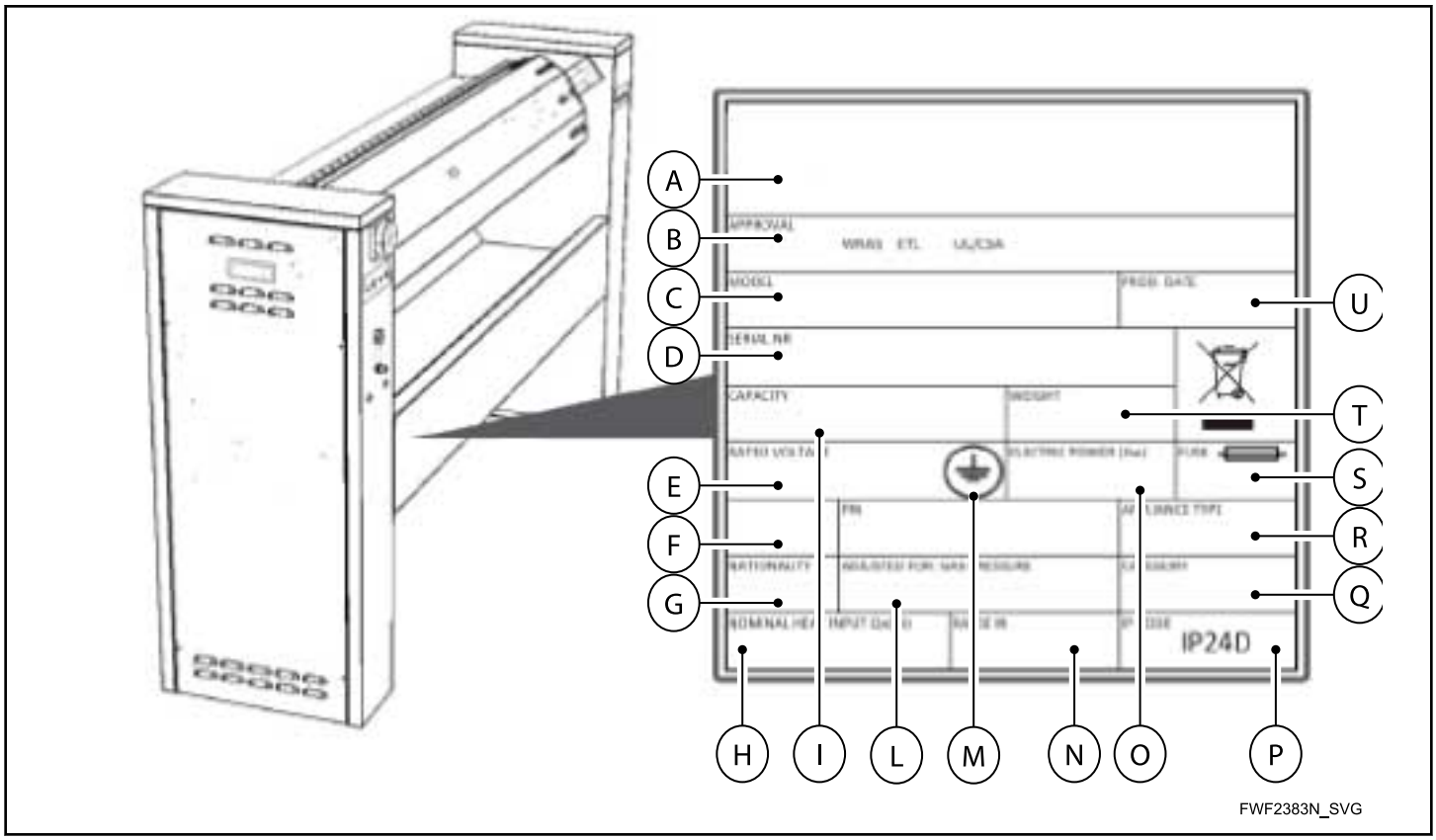

Figure 1

A	Company Name	**L**	Adjusted For
B	Approval	**M**	Pin
C	Model	**N**	Made In
D	Serial Number	**O**	Electric Power (kW)
E	Rated Voltage	**P**	IP Code
F	-	**Q**	Category
G	Nationality	**R**	Type of Appliance
H	Nominal Heat Input	**S**	Fuse Type
I	Flow Rate	**T**	Weight

Warranty

The warranty covers a period of **twelve months** from the date of purchase of the appliance or of an integral part thereof. The warranty cover replacement of failed parts ascertained to have failed due to faulty manufacture and it is applied directly by your supplier. Labor costs, shipping and packaging costs, and transport risks shall always be borne by the purchaser.

According to the warranty conditions, damaged parts must be returned carriage paid after communicating all data regarding the model, serial number, and defect of the appliance on which the component was assembled. The warranty does not apply to machines damaged due to negligence, incorrect connections, unsuitable installation, failure to comply with assembly or user instructions, or alterations by unauthorized personnel. Moreover, the warranty does not apply if the serial number has been changed, deleted, removed or is unknown.

The warranty does not cover the following material:

- Parts subject to normal wear such as belts, chains, bearings, springs, or shock absorbers
- Solenoid valve membranes, gaskets, and rubber parts in general

- Electric and electronic components such as motors, coils, contactors, resistors, circuit boards, inverters, etc.
- Functional casing subject to wear such as casing and covers of the ironing rollers

General Information and Definitions

Target Audience

The instructions for use and maintenance are designed for the people in charge of using and managing the machine and the technician trained to perform installation and maintenance procedures.

This manual contains information about the correct use of the machine, with a view to maintaining the function and quality of the machine over time. Information and warnings on proper and safe use and maintenance is also provided.

Supply and Storage of Instructions

The instructions for use and maintenance are provided in hard copy, and attached to the packaging with an adhesive envelope. All additional documentation (e.g. pneumatic and electrical diagrams, sub-suppliers manuals) is attached to this instruction manual.

NOTE: Keep this manual with the equipment so that it can be easily consulted by the operator.

The instructions are crucial for safety.

- They must be kept intact with all their parts. If they are lost or damaged, a new copy should be immediately requested.
- They must be kept with the machine until disposal, even in the case of transfer, sale, hire, rent, etc.).

The attached manuals are an integral part of this documentation and they should be treated as such, not separated from this manual.

IMPORTANT: Read these instructions for use and mainenance before proceeding with th einstallation and use of the machine. The instructions are also available on the manufacturer's website.

Glossary

Term	Definition
Machine/Appliance	The product that is the subject of this manual.
Danger	Potential source of damage
Damage	Physical injury, damage to people's health, deterioration of assets or of the environment
Severity	Extent of damage
Probability	Frequency of occurrence of a given type of damage
Risk	Combination of the probability of the occurrence of damage and the severity of that damage
Safety Devices	Protective device (different from a guard) that reduces risk (for mechanical or electric devices)
Guard	Part used to provide protection by means of a physical barrier
Soaking	Phase required to loosen dirt that is particularly difficult to remove
Weighing	Phase used to detect the weight (kg) of the load inside the drum
Pre-Washing	Phase of the washing cycle that helps loosen organic dirt
Washing	Main phase of the washing cycle required to loosen and remove dirt from fabric
Rinsing	Phase of the washing cycle required to remove the detergent and suspended dirt from fabric
Spin	Phase of the washing cycle at high speed of rotation required to mechanically remove water and detergent from fabric
Unrolling	Final phase of the washing cycle carried out to improve ease of removal from the drum
Drying	Removal of humidity contained in the fabrics through evaporation at a controlled temperature
Cooling	Decreasing the temperature to a safe level for handling of fabric

Table 2 *continues...*

Term	Definition
Ironing	Removal of fabric creases thanks to the combined action of proper temperature, humidity, and mechanical pressure
G Factor	Capacity of the machine to extract water by means of centrifugal force
Cycle/Program	Sequence of operations for fabric treatment saved in the machine (can be recalled at will)
Detergent Pump	Dispenser of specific products required to facilitate the removal of dirt or useful for the fabric treatment

Table 2 *continues...*

Term	Definition
Finishing	Final treatment of a fabric required to improve the aspect, fragrance, or conservation
Payment	A set price (in tokens or money) paid to use the basic service
Incremental Payment	Further payment of money or tokens, in addition to the basic payment, required to extend the service provided
User	The person using the machine or related services
Enabled/Trained Technician	Person trained and instructed to carry out specific safe technical interventions

Table 2

Warnings and Residual Risks

Defining the Operator Qualifications

Operators are people responsible for the installation, operation, adjustment, and routine maintenance and cleaning of the machine (each within the limits of the tasks assigned).

They are classified as:

Term	Definition
Informed person	Person adequately advised or supervised by a trained person in such a way as to be able to perceive risks and prevent dangers potentially posed by the appliance operation or maintenance
Enabled/Trained Technician	Trained, experienced person able to perceive risks and prevent dangers that may derive from interacting with the appliance. This person is trained to operate the machine with reduced safety devices or partial failure.
Plant Conductor	A person who: • is in charge of using the appliance • has read and understood all the relevant parts of this manual • is able to perform routine maintenance and clean the appliance

Table continues...

Term	Definition
User	A person who: • is in charge of using the appliance • is aware of the requirements on equipment use

WARNING

Operators must always adhere to:
- **The limits of their duties**
- **The warnings on the machine safety plates**
- **The service procedures provided for**

W1013

Residual Risks

The machine has been designed and constructed with safety in mind. Residual risks remain, however, as ouldined in *Table 3* .

Residual Risk	Provision	Picture
Risk of shearing/crushing	Do not insert hands or objects between the fixed part and the mobile part of the appliance.	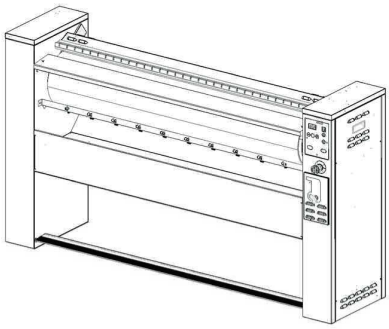 FWF2384N_SVG
Risk of burning or scalding	Do not touch the ironing basin (plate) with fingers: this is a serious burn hazard! Pay attention to the hot roller and the hot garments	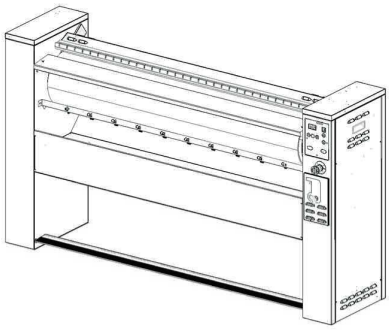 FWF2384N_SVG

Table 3 *continues...*

Residual Risk	Provision	Picture
Risk of burning	Do not touch fume exhaust pipes (A). These can reach high temperatures. Pipes must me suitably insulated and protected.	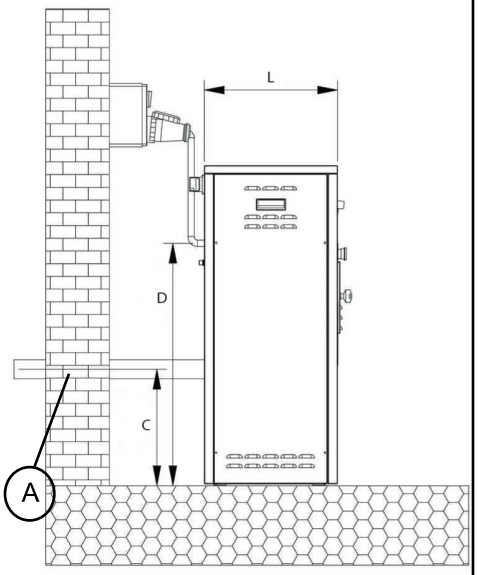 FWF2385N_SVG
Risk of fire	Do not iron dry garments.	
Risk of fire	Do not use the appliance to treat fibers soaked or contaminated with flammable substances, such as oil, grease, or fuels.	
Risk or poisoning/intoxication	Do not iron fabrics soaked with substances that can degrade with high temperatures. Chemical reactions may result from reagents capable of developing liquids or gases dangerous for human health or capable of affecting the appliance functional parts.	
Warning	Ventilate rooms during the first hours of use of the appliance. Residues from processing can cause odors during the first hours of operation. This is normal. The smell is not toxic and will disappear after a short time.	

Table 3

Description, Technical Data, and Intended Use

Intended Use

The ironer is intended for industrial use:

Operation	Allowed	Forbidden	Processing Environment
Ironing	Flat fabrics (with limited weight and volume)	• Fabrics soaked with flammable substances, solvents, acids, grease • Any material other than fabric	Industrial laundries, self-service laundries, condo laundries, hotel laundries, nursing homes, communities, hospitals, etc.

It has been designed to:

- Meet the specific requirements mentioned in the contract of sale
- Be used in accordance with the use instructions and limitations specified in this manual

The machine has been designed and manufactured to operate in safe conditions if:

- It is used within the limits described in this manual
- Procedures described in this manual are adhered to
- Routine maintenance is carried out at intervals using the methods indicated in this manual

- Extraordinary maintenance is carried out promptly if needed
- Safety devices are not removed and/or bypassed

WARNING

Never iron items of clothing soaked with flammable substances, solvents, acids, and/or grease, including essential oils.

W1014

WARNING

Any use not specifically indicated in this manual must be considered dangerous.

W1015

CAUTION

Remove all traces of stony and/or sandy material from fabrics before placing them into the washing machine.

W1016

IMPORTANT: The manufacturer cannot be held liable for damage deriving from any improper or incorrect use, or in any case not taken into account in this manual.

NOTE: Should it be necessary to iron special fabrics, please contact the after-sales assistance department of the manufacturer in advance.

NOTE: Please follow the washing instructions on the fabric labels. The manufacturer is not liable for damage to fabrics caused by ironing procedures other than those described in this manual.

Improper Use

The use of the machine for purposes other than those specified is considered improper use. The following are improper uses:

- Ironing of animal fur coats
- Ironing of paper sheets or similar sheets other than fabrics
- Ironing materials other than those specified in the contract of sale
- Using fabrics containing traces of stony and/or sandy materials
- Use in environments subject to atmospheric agents (and system exposure to lightning and brackish or salty environments)
- Use in environments with a high risk of fire and/or explosion
- Use in environments subject to electromagnetic disturbances.

Any other use needs prior authorization in writing by the manufacturer. In the absence of such written consent, any other use is considered improper. Therefore the manufacturer cannot be held liable for damage to property or people resulting from this improper use and considers any kind of warranty invalid.

WARNING

Do not install and use the appliance in an environment that can create an explosive atmosphere inside the machine.

W1017

Noise

The noise level operators are exposed to during operating cycles does not exceed 70 dB.

The actual noise level of the machine during operation when it is installed at a site in a production process is different from that detected, since noise is influenced by factors such as:

- Type and characteristics of the site
- Duration of exposure
- Other adjacent appliances in operation

IMPORTANT: It is the user's responsibility to take relevant preventive and protective measures, in accordance with the law governing the machine's country of installation and use.

General Description

The machine's structure consists of:

- A fixed part, made up of two support stringers, the feeding plate, the collection tank for the ironed garments, the system of pressure roller ribbons (optional), closing panels, the electric panel and the relevant accessories.
- A mobile part, including the ironing basin (or plate), the roller, the mechanical gear, the motor, the pressure springs, the device to lift the basin.

Refer to *Figure 2* and *Figure 3* for the structure of the machine.

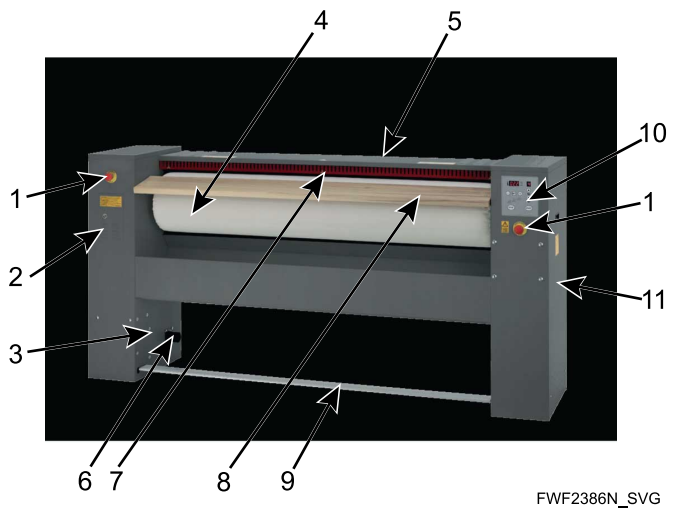

1. Emergency button
2. Emergency basin lifting door
3. Frame / Structure
4. Ironing roller
5. Ironing basin
6. Fume exhaust
7. Finger-safety fillet
8. Feeding table
9. Pedal
10. Control panel
11. Side panels of access

Figure 2

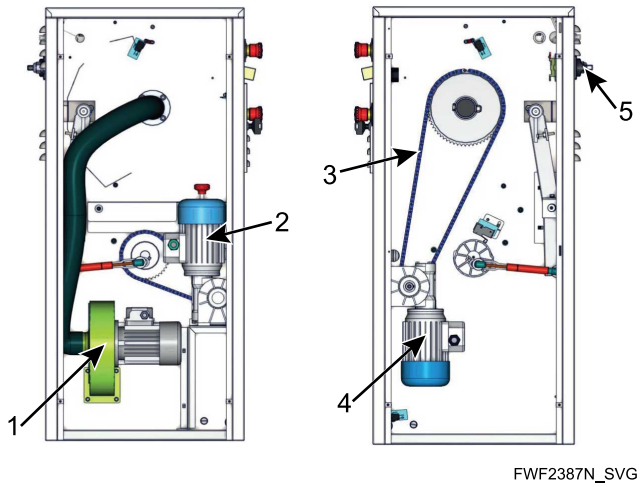

1. Fan
2. Basin motor
3. Gearing chain
4. Electric motor (in the side)
5. Disconnector

Figure 3

In the front of the machine are the machine control panel, the safety devices, and a feeding plate, which allows the feeding of wet garments to be ironed.

In the rear of the machine are the fittings for the electric energy and steam supplies (if the machine has this type of heating).

If the machine is fitted with the fume exhaust system, the drain is located in the rear of the machine. This drain is to be always conveyed outwards with a pipe of the same diameter as the exhaust pipe (refer to *Technical Data*) and a maximum length of 390 ft [10 m].

Avoid loops, tight turns and backwaters that can obstruct or limit the air draining.

The machine work cycle (standard, without optional elements) can be divided as follows in *Table 4* :

Phase	Description
1	Start up the appliance, heat it up to reach the temperature (5-7 minutes), by selecting the right temperature and speed of the roller based on the fabric to be processed.
2	Unfold the wet garments before introduction: if necessary, moisten them with a water spray.
3	Place the garments on the feeding table so as to occupy most of the roller: alternate the used areas of the roller by moving the garments near the sides of the machine.
4	Completely lift the basin, pushing the pedal.
5	Carefully arrange the garments with hands so they adhere to the roller and push the pedal to let the basin come down against the roller to start ironing. Keep hands close to the feeding table, without putting them near the ironing basin.
6	Continuously track and spread out the garments during the ironing operation, keeping the fabric slightly stretched so as to avoid any crease.

Table 4 *continues...*

Phase	Description
7	Withdraw the ironed garments from the bottom area of the machine.
8	Once ironing is completed, decrease the temperature to 68°F [20°C] and let the machine idle to allow the roller padding to dry in the residual heat of the machine.
9	Lift the basin by pushing the pedal and turn off the machine by pressing STOP.
10	Turn off the electric and other supplies.

Table 4

Phase	Description
2	Manual stretching: helps avoid feeding overlapped fabric into the machine. Overlapping fabric causes creases.
3	Heating and evaporation: remove permanent creases from the fiber by drying them gradually.
4	Mechanical pressure: combined with heat and humidity, it forces fibers flat. (ironing)
5	Output and cooling: allows maintenance of the ironing just performed.

Table 5

The ironing phases can be summarized as follows in *Table 5* :

Phase	Description
1	Initial check: each fabric has its own ideal temperature and humidity conditions to be set on the machine in order to reach the expected result. Read the labels on the fabric to be processed.

Table 5 *continues...*

Dimensions

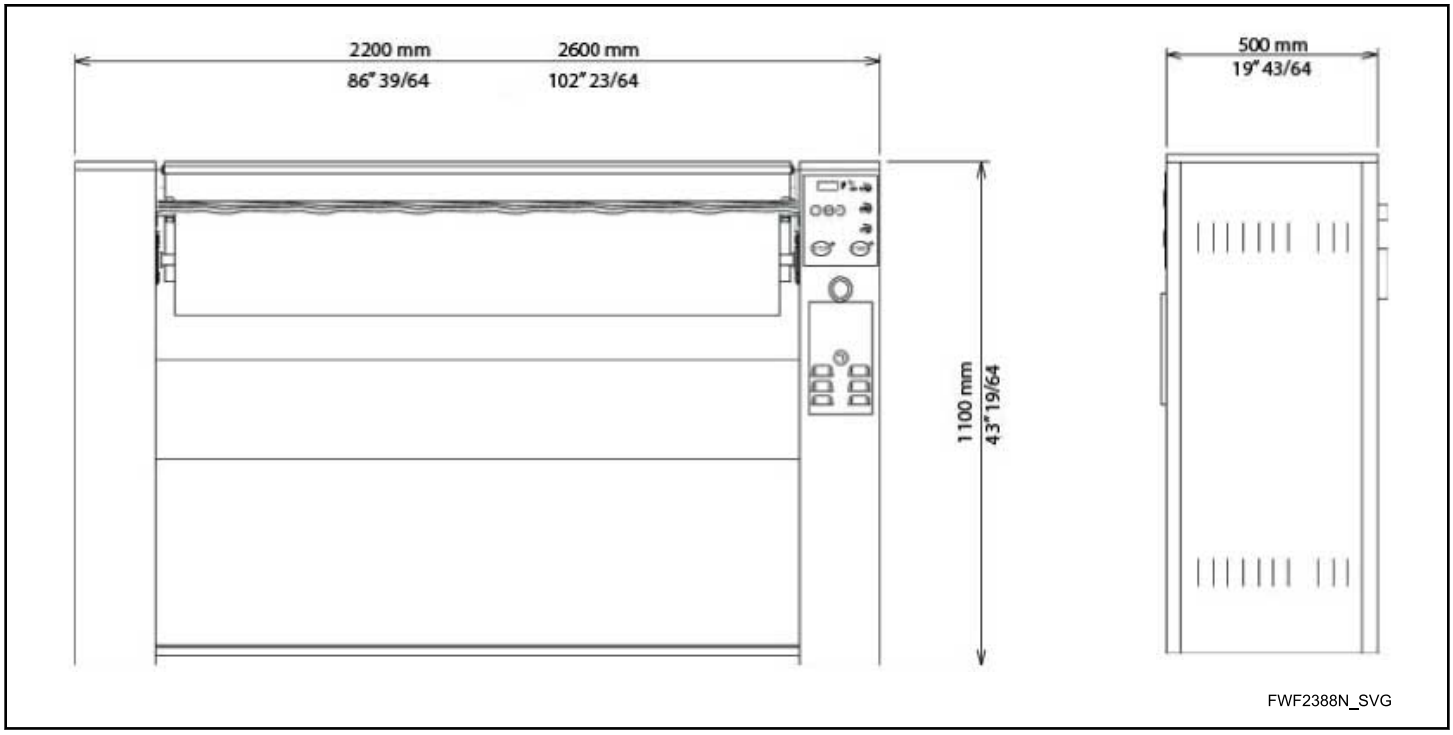

Figure 4

Technical Data

General Data I30-160/200

Characteristics	I30-160	I30-160 AV	I30-160 AVL	I30-200 AV	I30-200 AVL
Basin movement	Automatic				
Roller metallic spring casing	-	-	STD	-	STD
Fume extractor	-	STD	STD	STD	STD
Extractor flow rate [mc/h]	-	200	200	200	200
Exhaust diameter [mm]	-	55	55	55	55
Roller length [mm]	1600	1600	1600	2000	2000
Roller diameter [mm]	-	STD	STD	STD	STD
Driving speed without variator [m/min]	3.9	-	-	-	-
Driving speed with variator	-	2÷4	2÷4	2÷4	2÷4

Table 6 *continues...*

Characteristics	I30-160	I30-160 AV	I30-160 AVL	I30-200 AV	I30-200 AVL
Hourly productivity Relative humidity of the incoming garments	50 kg/h - 12%	50 kg/h - 12%	50 kg/h - 12%	79 kg/h - 12%	79 kg/h - 12%
		32 kg/h - 20%	32 kg/h - 20%	52 kg/h - 20%	52 kg/h - 20%
			20kg/h - 45%		25kg/h - 45%
Noise level [dB]	45	50			
Heating	Electrical				
Heating power [kW]	13.2	13.2	13.2	16.8	16.8
Motor and auxiliary power [kW]	0.40	0.48	0.67	0.67	0.67
Total power [kw]	13.6	13.7	13.9	17.7	17.7
Power dispersed in the room [kW]	13.6	~10	~10	~10	~10
Power supply	230-240V 3~ 50 Hz	230-240V 3~ 50/60 Hz			
	380-415V 3~ 50 Hz (OPT: 60Hz)	380-415V 3~ 50/60 Hz			
	440-480V 3 ~ 60 Hz	440-480V 3~ 50/60 Hz			
Net/gross weight (kg)	257/295	262/300	262/300	294/350	294/350
Width [mm]	2200	2200	2200	2690	2690
Depth [mm]	500	500	500	500	500
Height [mm]	1100	1100	1100	1100	1100

Table 6

IP Protection

Model	IP Degree of Protection	Description
All models	IP X0	Appliance not protected against dust and water

Table 7

Safety Devices

The machine has been provided with safety devices to minimize risks for the user. These are:

- Rotating finger-safety fillet
- Emergency stop

Activating one of the safety or emergency devices stops the machine and returns it to home position (open basin) to allow the operator to reorganize and restore normal working conditions in a safe manner.

Transportation, Storage, and Unpacking

Safety Warnings for Transport

IMPORTANT: After receiving the machine, check the condition of the packaging. If there is visible damage, remove the packaging in the presence of the carrier and sign the transport document only if satisfied with the condition of the machine.

Attention: The manufacturer is not liable for any material damage or personal injury due to accidents caused by failure to comply with the instructions in this manual.

CAUTION

The area where the machine is transported and handled must only be entered by the personnel involved in these operations.

W1018

CAUTION

The transit areas to the installation site must withstand at least the static load of the machine and transport system.

W1019

CAUTION

During transport operations do not exert any pressure on the packaging as the machine components located along the packaging edges may be damaged.

W1020

CAUTION

Because of the ironer's peculiar shape, it has a barycenter shifted to the upper part of the machine. Turnover and fall hazard! Drive the means of transportation gradually, avoiding sudden maneuvers.

W1021

CAUTION

The original pallet is designed to limit the turnover effects. Keep the original packaging for future transfers. Make sure that the ironer is firmly screwed to the pallet before carrying out any movement, even in future.

W1022

Dimensions and Weights for Transport

Refer to *Table 8* for the dimensions and weights of the packaged machine. Values shown are needed to select an appropriate means of transportation.

Model	Gross weight [kg]	Width [mm]	Depth [mm]	Height [mm]	Volume [m^3]	Min. fork length [mm]	Min. fork wheel base [mm]
I30-160	295	2280	610	1320	1.84	800	1000
I30-160 AV	300	2280	610	1320	1.84	800	1000
I30-160 AVL	300	2280	610	1320	202	800	1200
I30-200 AV	350	2690	610	1320	2.2	800	1200
I30-200 AVL	350	2690	610	1320	2.2	800	1200

Table 8

Transport with Transpallet

CAUTION

The transport and handling activities described in this section must be performed only by qualified personnel who have the proper training for such operations.

W1023

IMPORTANT: Refer to *Dimensions and Weights for Transport* and check the weight of the appliance.

The machine must be transported as close to the installation point as possible on a pallet by means of a transpallet.

NOTE: Observe the minimum fork length specified in *Dimensions and Weights for Transport*.

CAUTION

Do not lift the machine without first anchoring it to a pallet.

W1024

To move the machine with a transpallet (refer to *Figure 5*):

1. Place the transpallet forks under the pallet to which the machine is fastened.
2. Slowly lift a few inches and check the grip stability.
3. Proceed slowly until near the place of installation and lower the load again.

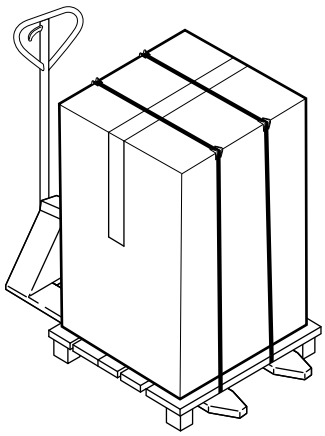

Figure 5

Once the machine is at the installation site:

1. Unscrew the pallet fixing screws on the base of the machine.
2. Gently slide the machine off the pallet.
3. Manually push the machine to the final installation position.

IMPORTANT: Any damage caused by handling the machine in a different way from that described in this manual shall not be attributed to the manufacturer.

Unpacking

IMPORTANT: After receiving the machine, check the condition of the packaging.

If there is damage to the packaging:

1. Leave the damaged packaging as it was found.
2. Immediately insist on a damage assessment by the company responsible for shipping.
3. Report the damage to the relevant transport insurance.

If there is no damage to the packaging, unpack the machine after placing the packaged appliance in the designated installation area:

1. Cut the straps that secure the cardboard box.
2. Lift the cardboard box upwards.
3. Remove the protective packaging.

IMPORTANT: Put the packaging materials in a safe place, not accessible to unauthorized people, and keep them for any future movements.

After removing the packaging, check that:

- The machine does not show any physical damage due to shocks, tears, or abrasions.
- There are no marks or dents on the side panels indicative of shocks during transport.

Disposal of Packaging

NOTE: If packaging is disposed of, comply with regulations applied in the country of installation.

The following materials are used for packaging:

- Cellophane
- Cardboard (box)
- Wood (pallet)
- Polystyrene

The packaging is an integral part of deliver and is not collected, so the purchaser is responsible for its disposal.

IMPORTANT: Keep the instructions for use and all other documents related to the machine supplied with the packaging.

Storage

The machine must be stored in a closed environment, protected from the elements.

Refer to *Table 9* for the minimum and maximum conditions for the machine.

Model	Room Temperature °F [°C]		Room Relative Humidity (%)	
	Minimum	Maximum	Minimum	Maximum
All Models	32 [0]	131 [55]	0 without condensation	90 without condensation

Table 9

If the machine is not used for a period exceeding one month, please observe the following:

1. Stop the cooled machine with the ironing plate in open position.
2. Disconnect the power plug.
3. Disconnect the steam drain pipe.
4. Remove any residual detergent or dirt.
5. Protect the machine from dust using the bag supplied.
6. Keep the machine in a closed place under the expected environmental conditions.

NOTE: In the event of long periods of storage, leave the machine in its original packaging, which guarantees excellent protection.

NOTE: Any damage caused by improper storage is not to be attributed to the manufacturer.

Installation and Connections

Installation

CAUTION

Installation must be carried out by a qualified installer trained by the manufacturer in the presence of an electrical technician able to make the electrical connections required.

W1025

CAUTION

For models equipped with the extractor, after carrying out the connections, make sure there are no bottlenecks in the pipes used.

W1026

CAUTION

For models equipped with steam heating, the connections to the appliance must be carried out by a qualified installer.

W1027

IMPORTANT: Any installation changes must be approved by the manufacturer. If changes are not approved, the manufacturer assumes no liability for injury or damage.

IMPORTANT: The manufacturer is not liable for any damage tot he machine caused by incorrect installation, connection, or use of materials different from those specified.

Permissable Ambient Conditions

Refer to *Table 10* for the minimum and maximum conditions for the machine.

Model	Power Supply		Steam Pressure* (kPa/bar/psi)		Room Temperature °F [°C]		Room Relative Humidity (%)		Altitude (m)
	Voltage (V)	Frequency (Hz)	Minimum	Maximum	Minimum	Maximum	Minimum	Maximum	Maximum
All Models	±10% with reference to nominal voltage	± 1 Hz with reference to nominal frequency	800 kPa 8 bar 116 psi	1150 kPa 11.5 bar 167 psi	41°F [5°C]	95°C [35°C]	30% without condensation	90% without condensation	1000 m
*only for machines with steam heating									

Table 10

CAUTION

The machine is not suitable for installation in corrosive, aggressive, or hazardous environments such as:

- **cities or urban areas with high pollution levels**
- **coastal or brackish regions**
- **areas where there is a strong presence of chlorine such as pools or similar**
- **Mines or other excessively dusty or sandy environments**
- **Environments with explosive or flammable atmospheres**
- **Underground areas with stagnant air or poor air circulation**
- **Areas close to plants that use or produce chemicals, fertilizers, or similar**

Installing the machine in these areas may cause premature corrosion of the structural and functional parts as well as unwanted malfunctions.

W1028

IMPORTANT: Install the equipment in a place with sufficient natural lighting and ventilation.

Electrical Connection

CAUTION

Connections to the machine must be carried out by a qualified installer trained by the manufacturer in the presence of an electrical technician able to make the electrical connections required.

W1029

CAUTION

For machines with steam supply, make sure that the electrical connection cable cannot come into contact with the steam supply pipe or condensation collection/recovery pipe.

W1030

CAUTION

An independent circuit must be used for each machine. The electrical installation of the laundry facility must include a differential switch (RCD) type B and an automatic disconnection device (laundry distribution unit).

W1031

IMPORTANT: The electrical connection must be carried out in compliance with the rules in force in the country of installation.

IMPORTANT: Power the appliance in accordance with its rating plate data, and check the distribution system for correctness.

Earthing Connection

CAUTION

The appliance must be connected to the protective earthing system of the room where it is installed using an independent conductor.

W1032

The appliance described in this manual is set up for a "TT" earthing system.

To perform a protective earthing connection:

1. Connect to the clamp on the side of the disconnector switch of the electrical panel.

   NOTE: Use the cable gland mounted on the rear panel.

Refer to *Figure 6* for earthing connection information.

CAUTION

Should multiple machines be installed in the same room, ensure that a protective equipotential connection is made between all machines, using the outer protective clamp on the rear of the washing machine. Then connect to the earthing connection through an earthing protective circuit alternative to the earth wire provided with the socket.

W1033

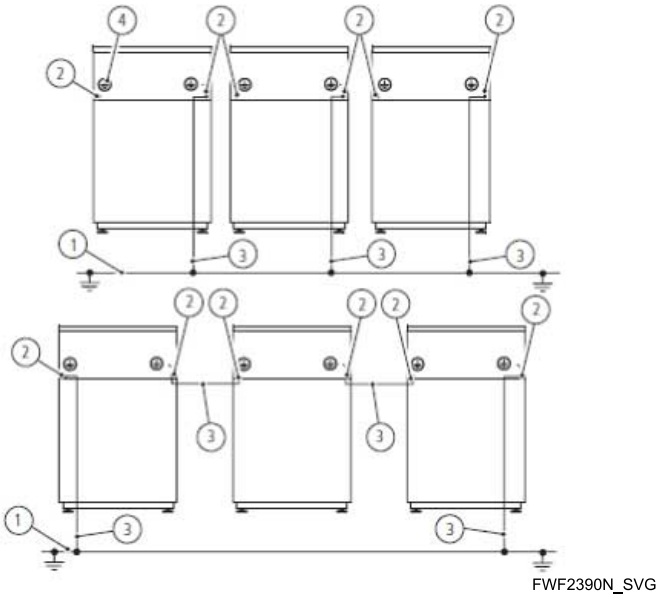

1. Laundry protective earthing
2. Washing machine outer protective clamp
3. Protective conductor - connection of the machines
4. Equipotential earthing symbol

Figure 6

If multiple single-phase machines are connected in parallel, they must be connected as shown in *Figure 7* .

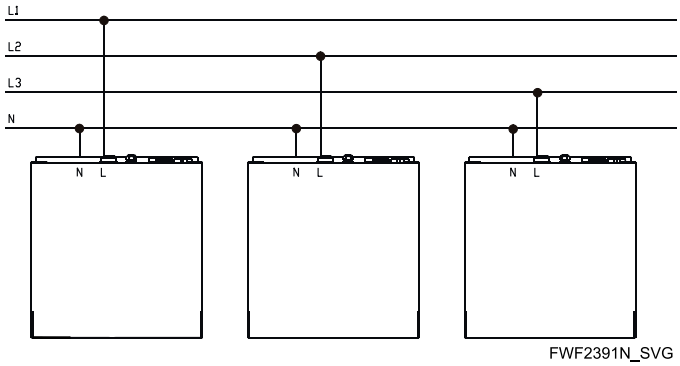

Figure 7

The frequency inverter and motor power supply phase, which is connected to the clamp inside the machine, must be alternately connected to the mains L1 phase for the first machine, and to the L2 second phase for the second machine, etc. The fourth machine must be connected to the L1 first phase. This ensures a uniform load of the electrical mains.

Power Supply Connection

Refer to *Figure 8* for the connection diagram of the machine to the electrical mains (with differential switch).

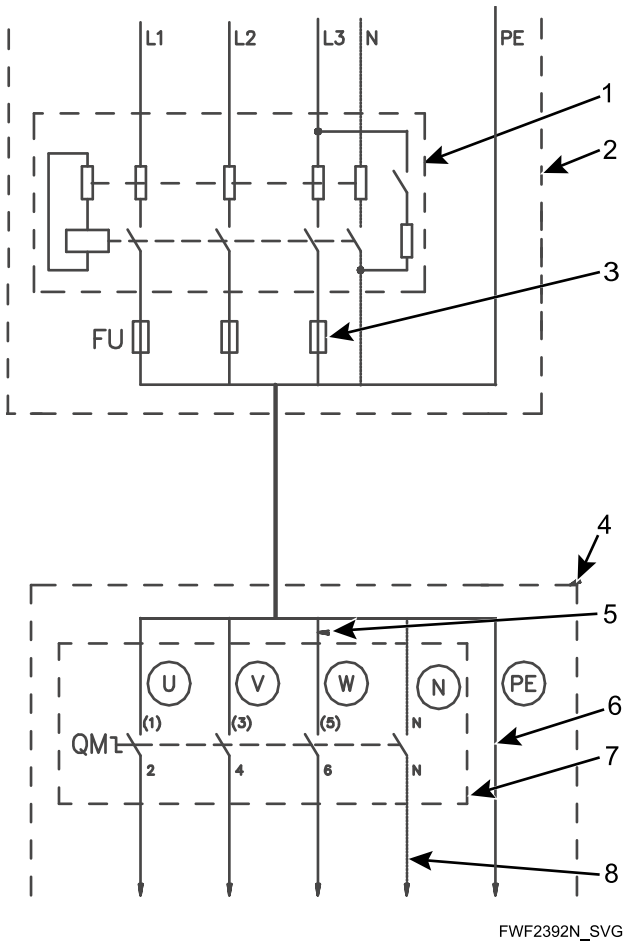

1. Differential switch (RCD)
   - Operating current = 100mA (if 100mA is not possible at the installation site, use 30mA current and choose the minumum delay type)
   - Install max. 2 machines for each RCD (for 30mA, install max one machine)
   - Type B
2. Laundry power distribution board
3. Power protection
   - Protects the equipment and the electrical installation against overload and short circuit. Fuses or circuit breakers can be used as power protection devices.

     NOTE: Protection must be "slow", curve D. If this is not possible, use the 1st protective device exceeding rated current so as to prevent the connection from being cut off during the machine start-up.
4. Washing machine
5. Phase conductors
6. Protective conductor
7. Master switch power supply clamp
8. Neutral conductor

Figure 8

NOTE: The power supply cable is not part of the supply.

The power supply cable must be:

- conducting with copper nuclei
- flexible
- short and reach straight from the power protection device to the machine without deviation
- for the section (refer to *Table 11*)
- without plugs or extension cords (the machine is intended to be permanently connected to the electrical mains)

Minimum Sections of Power Supply Conductors			
Power protection (US)		Phase conductor minimum section mm^2 (AWG)	Protective conductor minimum section mm^2 (AWG)
Int. protection	Fuses		
20A (20A)	16A (15A)	2.5 mm^2 (AWG 13)	2.5 mm^2 (AWG 13)
25A (-)	20A (20A)	4 mm^2 (AWG 11)	4 mm^2 (AWG 11)
40A (40A)	32A (30A)	6 mm^2 (AWG 9)	6 mm^2 (AWG 9)
63A (-)	50A (50A)	10 mm^2 (AWG 7)	10 mm^2 (AWG 7)
80A	63A	16 mm^2	16 mm^2
100A	80A	25 mm^2	16 mm^2
125A	100A	35 mm^2	25 mm^2

Table 11

Refer to *Figure 9* for power supply cable conductor ends.

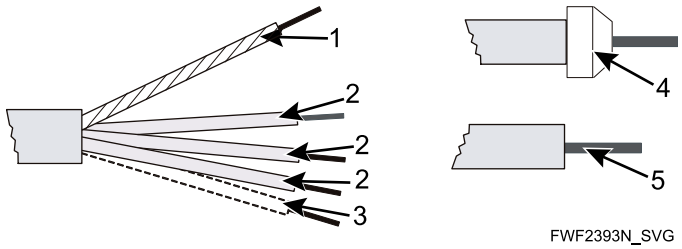

1. Protective conductor
2. Phase conductor
3. Neutral conductor
4. Tube terminal
5. Stripped conductor length

Figure 9

Refer to *Figure 10* for main supply connection.

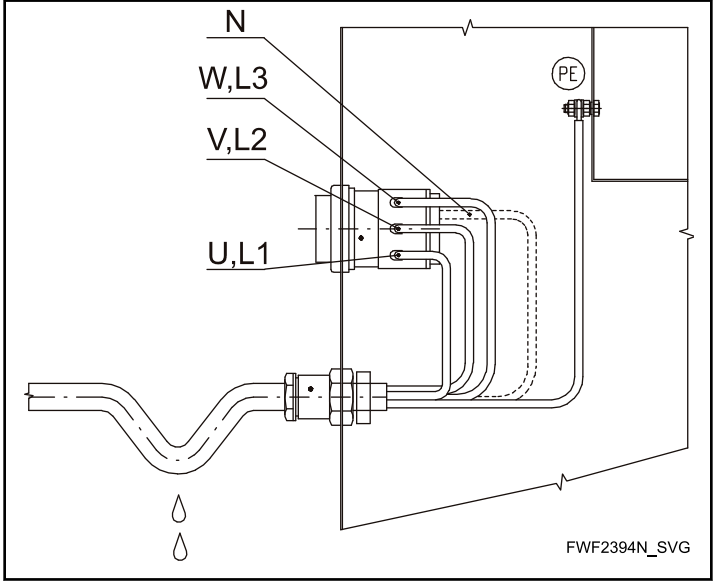

Figure 10

To make the power supply connection:

1. Insert the cable into the hole on the rear panel.
2. Strip the individual wires.
3. Leave the (PE) protective earth conductor slightly longer.

   NOTE: This is so that it disconnects last in case of accidental detachment of the cable.
4. For stripped conductor ends, use isolated pins for L1/U, L2/V, L3/W, N.

   NOTE: Make sure no accidental contact is possible as the power supply cable remains live even if the master switch is turned off.
5. Insert the protective conductor into the eyelet of the cable to ensure proper connection of the PE clamp.

6. Connect the conductors of the power supply cable to the terminals (L1/U, L2/V, L3/W, N) and the clamp (copper screw) marked PE.
7. Loosen the cable before running it into the loop.

   NOTE: This prevents condensation water from penetrating into the machine.

CAUTION

Check that the cable has a bend that is lower than the machine inlet or terminal board, in a way that any drops of condensation on the cable do not come into contact with the electrical connections.

W1034

Space Requirements

Refer to *Figure 11* for the space requirements to install the machine.

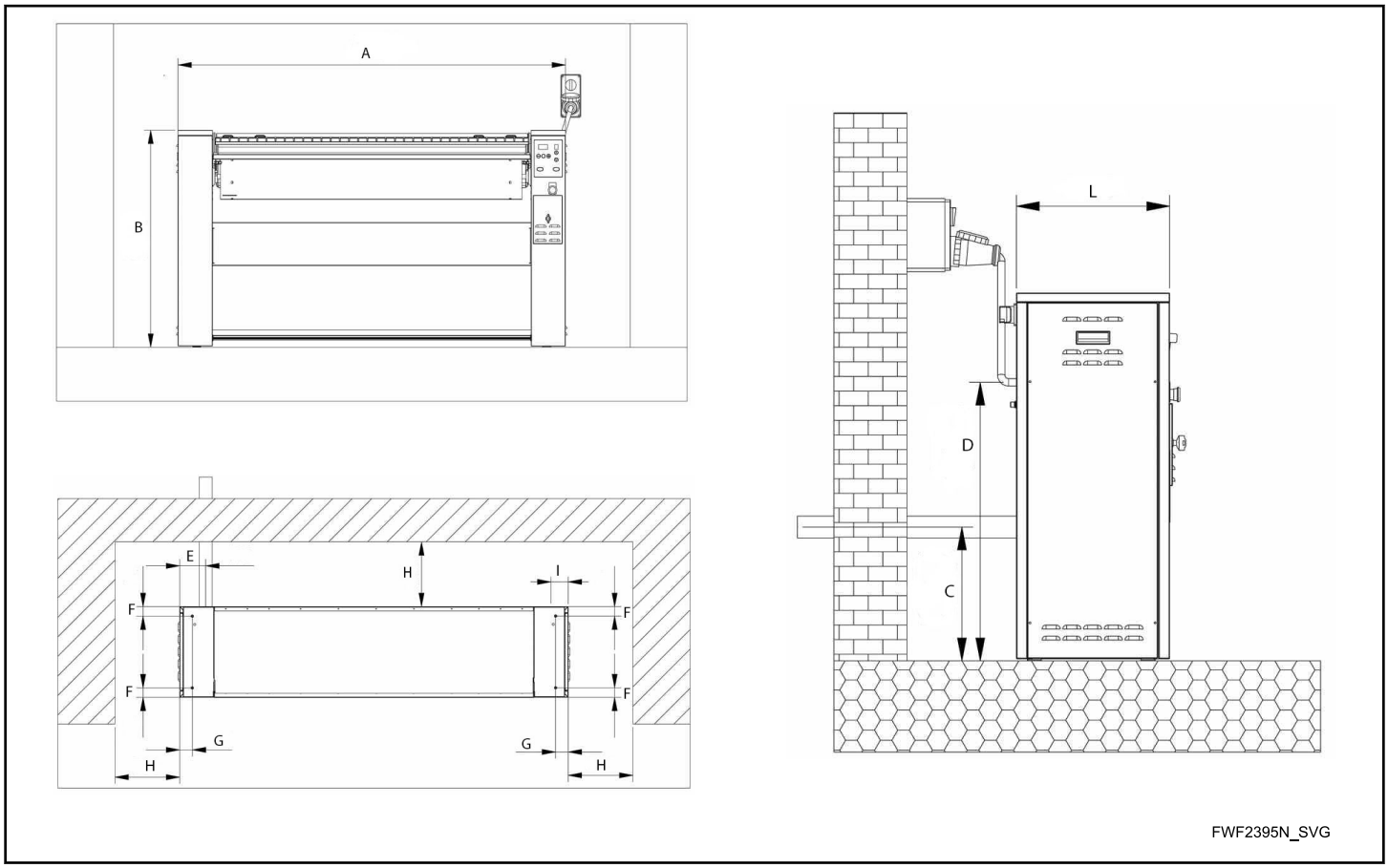

Figure 11

Pos.	I30-160	I30-200
A in [mm]	86 39/64 [2200]	102 23/64 [2600]
B in [mm]	43 5/16 [1100]	
C in [mm]	5 33/64 [140]	
D in [mm]	37 13/32 [950]	
E in [mm]	11 13/16 [300]	

Table continues...

Pos.	I30-160	I30-200
F in [mm]	1 49/64 [45]	
G in [mm]	4 59/64 [125]	
H in [mm]	11 13/16 [300]	
L in [mm]	19 43/64 [500]	

Installation and Positioning Site

The installation site must meet the following requirements:

- be on the ground floor of a building
- have a floor capable of supporting the weight of the appliance and in which a cement screed has been laid
- have mains connections made in accordance with the applicable regulations of the country of installation

In order to raise the machines off the floor by 150-200 mm, it is possible to create a reinforced concrete baseboard during the hardening phase.

The machine must be positioned to avoid jets of steam, water, or other liquids.

NOTE: In the event the machine is not installed on the ground floor of a building, the manufacturer provides the weight and forces applied by the machines in order to make structural calculations. Refer to *Table 6* .

CAUTION

Do not install the machine on wooden floors.

W1035

CAUTION

Check that the machine has sufficient space according to the installation layouts.

W1036

CAUTION

Do not install and use the machine with an explosive atmosphere inside the machine.

W1037

To allow installation and support interventions, comply with the recommended distances:

- at least 500 mm of free space between the machine and the rear wall
- at least 50 mm of free space between machine's side and side wall or other machine

In addition, check that:

- the electric absorption of the machine is lower than that supplied by the electric company
- the steam and pressure available (for machines with this type of heating) are within the accepted values

Securing the Machine

Under normal working conditions, the equipment does not need to be fastened to the ground.

For special application (such as on board a ship), carry out the following procedure to secure the machine.

1. Remove the side panels.
   a. Unscrew the side screws that hold the ironer panels in place.
   b. Remove both side panels and place them near the equipment.

      NOTE: Take care not to tear the electrical ground connection off of the panels.
   c. Lift the machine off the ground, freeing the leveling feet: use solid wooden shims to lift the machine a few centimeters.
   d. Unscrew and remove the leveling feet and their threaded inserts.
2. Secure the machine to the floor or metal base.
   a. Position the machine, observing the minimum clearances.
   b. Ensure that the machine is stable and level. If it is not, level it by inserting stainless steel supports or galvanized spacers (not supplied) between the machine frame and the floor.
   c. Mark the 4 securing holes and move the machine away from the place of installation.
   d. Drill 4 holes in the places that have been marked using a tine-hammer (or drill for metal supports).
   e. Re-position the machine: insert the washers until they block the light.
   f. Fix the equipment to the floor using M8 anchor bolts (mechanical or chemical) with a minimum length of 100 mm (not supplied). Tighten the nuts with a torque of at least 40 Nm until you find the interposed shims. Alternatively, it is

possible to use a bolted joint: in this case use anti-collision systems (washers or self-locking nuts).

CAUTION

If the machine is not fixed to the floor, it can move and cause damage to people and / or things.

W1038

NOTE: Tighten the dowels only after verifying the actual stability and leveling of the equipment.

CAUTION

Always check that the machine is well leveled. Whenever the machine is moved, the leveling and securing operations must always be carried out.

W1039

CAUTION

Do not weld the machine to the metal support structure. The internal components will be irreparably damaged by the currents generated by the welding machine. If this is unavoidable, remove the electronic parts such as control board and inverter before proceeding with the welding.

W1040

Ironing Steam Exhaust Connection (Fume)

Convey the steam exhaust outwards by means of pipe with a smooth internal surface. Make sure not to install more than three 90°-bends as the extraction could be insufficient. In order to reach good machine efficiency, we recommend pipes not longer than 5 meters. Avoid condensate stagnation that could obstruct the air flow.

Steam and Condensation Connection (Machines with Steam Heating Only)

Model	Inlet Size	Steam Type	Inlet Steam Pressure
All models with steam heating	M 3/4" threaded	Dry saturated steam	800 KPa ÷ 1150 KPa

Provide a valve to disconnect the machine in case of maintenance or failure.

Insert the supplied filter with F/F 3/4” thread between the steam valve and the machine inlet.

The opening of the steam valve must be done gradually in order to avoid excess pressure or water hammer with consequent damage to the connected parts.

IMPORTANT: The recommended pressure for optimal performance ranges from 900 kPa to 1000 kPa (9-10bar). If the system pressure values fall outside the specified range, please contact the manufacturer.

IMPORTANT: The temperature of the steam powered machine can not be set. The ironing temperature will be directly proportional to the steam pressure present in the system. Steam pressure between 500 kPa and 900 kPa corresponds to a temperature between 130°C and 155°C.

IMPORTANT: The temperature of the shut-off valves, after a few hours of work, is very hot, despite good thermal insulation. Always use appropriate protections before operating the steam-connected control devices.

DANGER

Do not exceed the maximum pressure indicated: danger of explosion!

W1041

WARNING

Coat the steam inlet and/or condensate outlet hose with the insulating sheath supplied to prevent the operator from getting burned.

W1042

CAUTION

Do not use the machine if there are malfunctions or leaks in the steam circuit. Close the shut-off valves, ventilate the room and contact the technical assistance service.

W1043

The condensate drain must be installed at the outlet of the machine.

Settings, Adjustments, and Commissioning

Commissioning and Testing

Functional testing, designed to check the machine for proper operation, is carried out at the factory.

On-site, during commissioning, a technician must check that the machine is properly installed. This means checking:

- positioning and leveling of the machine
- distances from other equipment
- the suitability of the premises
- functionality of the installed machine
- electrical connections

Phase Sequence

The ironer is tested at the manufacturer's premises witih respect to the phase sequence L1-L2-L3 (A1-A2-A3) (R-S-T): this phase sequence must be respected even during the commissioning to prevent damage to the machine. In the machine is fitted with suction, the connection of the phase sequence is important to achieve good aspiration of vapors.

If the machine has a fan, the check can also be performed as follows:

1. Switch off the machine and separate it electrically from the net by setting the main switch to position "OFF" or "0".
2. Remove the cover from the side panel where the fan is located and set it aside.
3. Switch on the machine by setting the main switch to position "ON" or "1".
4. Push the "START" button on the control panel, but don't touch the pedal. The fan will start.
5. Push the "STOP" button on the control panel. The fan will decrease its rotation until it stops.
6. During the deceleration, visually check the direction of rotation and verify that this rotation matches the arrow on fan. If the fan rotates in the opposite direction, switch off the machine and separate it electrically from the net by setting the main switch to position "OFF" or "0", then invert two of the three power phases. Repeat the check: the fan should now rotate in the right direction and strong air flow should come out of the exaust pipe.

If the machine is not fitted with suction, phase direction can be tested manually as follows:

1. Check that the basin is down on the roller, otherwise, remove the lid meant for manual intervention by using the ad-hoc key supplied and turn the motor handwheel counterclockwise until the basin is pressed against the roller.
2. Turn on the wall and machine cutout switches and press contactor K4 (which is marked with a red dot) with a screwdriver. The basin should then raise. If it does not, turn both cutout switches off, invert two of the three power phases and repeat the test.

CAUTION

The pressure on contactor K4 must last for only an instant to prevent damage to any persons, animals, or property surrounding the machine.

W1044

3. After checking the direction of rotation, put the emergency lid back in place, lock it, and fasten the side panels.

CAUTION

In order to prevent accidental inversion, make sure the customer, user, or person in charge of the laundry room electrical plant understands the importance of phase cyclic direction.

W1045

Remember: The warranty is not applicable to machines damaged by incorrect installation.

Adjustments

NOTE: Adjustment operations must be performed by a certified technician who has been trained by the manufacturer.

Adjusting the Micro-Switch

The machine has been adjusted and tested before leaving the plant.

If something causes the adjustment to be changed, check that the limit switches of the hollow, which correspond to the cam mechanism, work correctly.

During adjustment, make sure that the gas springs are lightly compressed (at least 10 mm) when the machine is lowered (pressed) on the roller.

Incorrect adjustment of the run microswitches prevents correct operation of the ironing tray.

Feeding Table

Remove the paper protecting the roller.

Install the wooden board, which supports garments, on the side supports, using the screws that are flat under their heads and the nuts. Refer to *Figure 12* . The screw head and the longer side of the board are turned upwards.

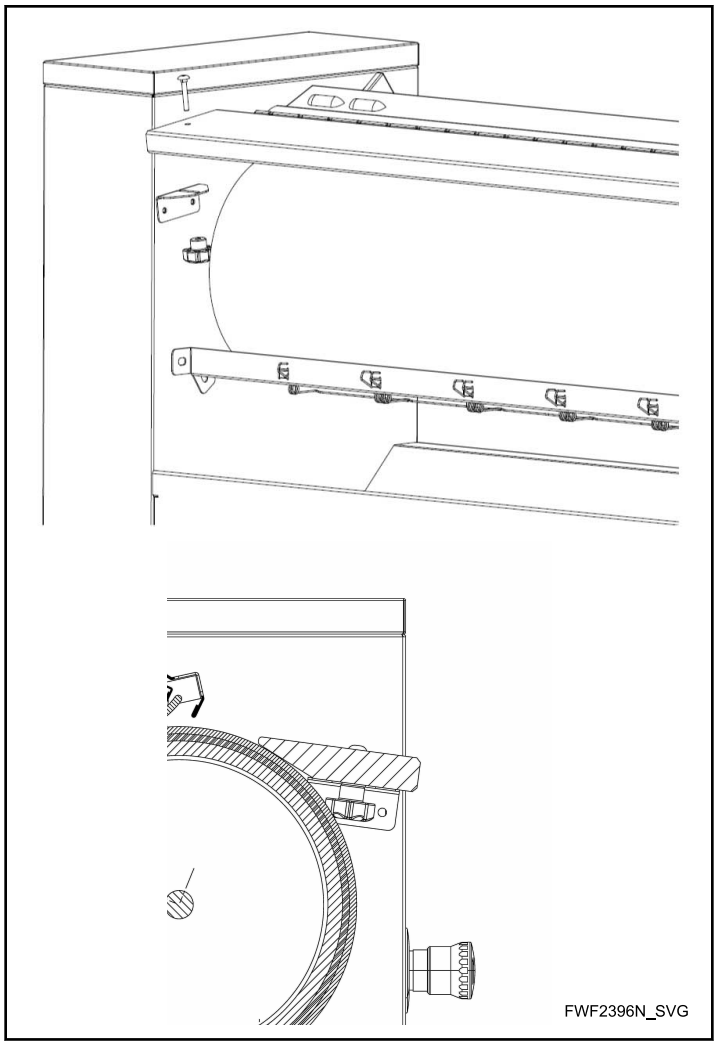

Figure 12

Initial Start-Up

Power the machine by turning on the isolating switch on the machine's control board.

1. Refer to the *Safety Information* before starting the machine.
2. Press START and check that the fan starts (only on models fitted with extractor).
3. Start the machine by pushing the pedal slightly and check the rotation of the roller: looking at the roller from the front, it must rotate so it will drive the garments to the basin. Make sure the ironing basin descends at the same time.
4. Push the pedal again and check that the machine inverts the direction of rotation and that it simultaneously lifts up the basin until the end of stroke. During this phase no anomalous sounds should be generated: if it is not the case, contact an authorized after-sales center.
5. Set a temperature of 302°F [150°C] on the control panel (refer to) and push the pedal to start the machine.
6. The temperature will increase gradually until it reaches the set value.
7. For machines fitted with a speed variator, try to change the rotation speed of the ironing roller.
8. Introduce water-dampened, clean cotton to remove the presence of dust or other processing residues from the ironing surface.
9. Withdraw the ironed fabric from the bottom area of the ironer.

NOTE: Aerate the room during the initial warm start. Residues from processing can cause an odor during the first hours of operation. This is normal. The smell is not toxic and will disappear after a short time.

Operating Instructions

Control Panel

The control panel allows the user to start and stop the cycles, and to control the equipment during the cycles. Two different types of control panels are available: standard, and with roller speed variator.

The control panel consists of the following elements (refer to *Figure 13*):

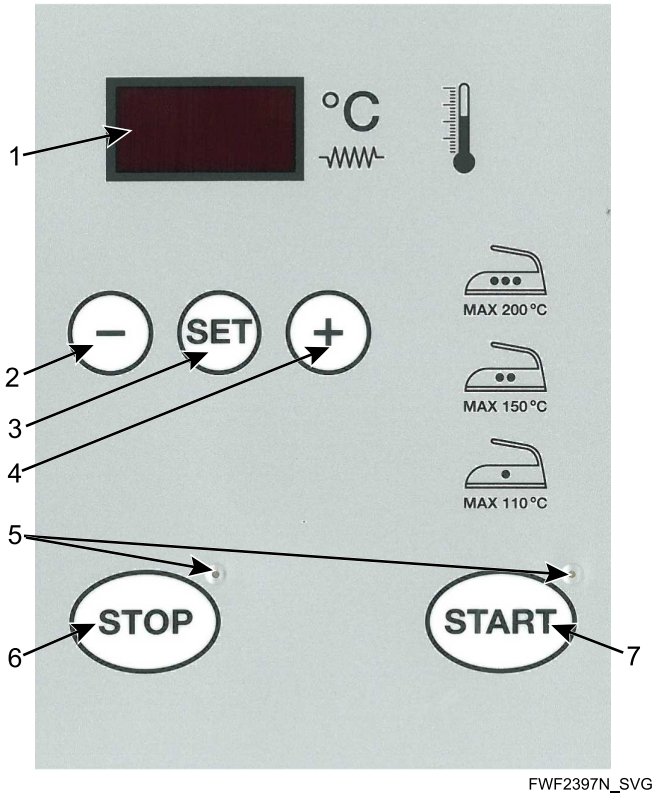

1. Ironing basin temperature display
2. Ironing basin temperature decrease button
3. Ironing basin temperature confirm button
4. Ironing basin temperature increase button
5. LEDs
6. Stop button
7. Start button

Figure 13

For appliances with roller speed variator, the control panel consists also of the following elements (refer to *Figure 14*):

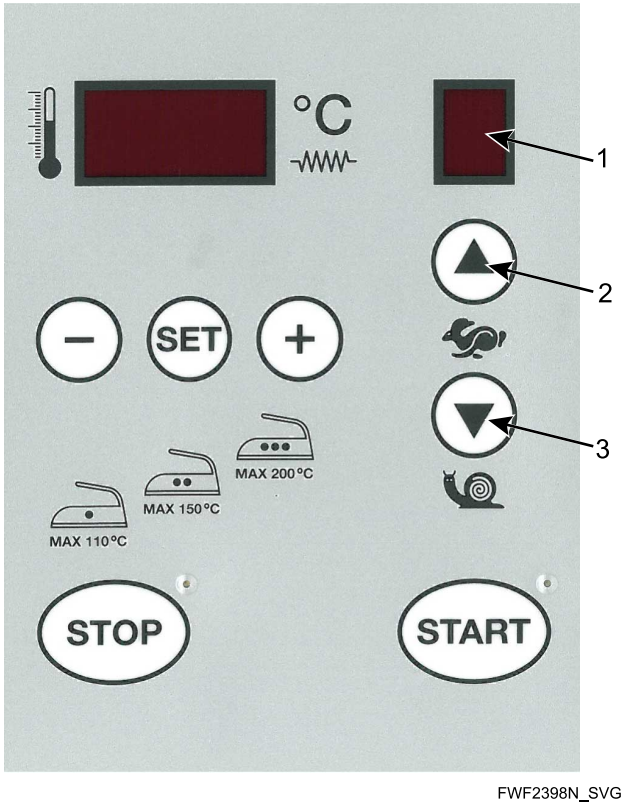

1. Roller speed display
2. Roller speed increase button
3. Roller speed decrease button

Figure 14

As a reminder, the panel shows the international laundry symbols for different maximum ironing temperatures.

Operation

Power on the machine by activating the master automatic isolating switch on the wall and activating the switch located on the right side of the machine. The yellow light on the control panel will turn on, indicating that the machine is powered. Pressing START will turn on the green light, which indicates the machine is on, the temperature display, and the selected speed display (speed display is only present on models fitted with speed variator).

Temperature Adjustment

On the control panel there are three buttons that enable the temperature adjustment: the “+”, “-” and “SET” buttons. The real temperature of the ironing basin (in °C) is indicated continuously. Pressing SET displays the selected temperature and makes it flash; pressing the “+” and “-” buttons changes the selected work-

ing temperature. After a few seconds, if no button is pressed, the display returns to normal and the ironing basin begins to heat. Once fully operational, the temperature should remain at the selected temperature with only minimal deviations.

NOTE: A deviation of 9-16°F [5-8°C] from the set temperature does not cause any variation in the ironing quality. When introducing first garments to be ironed, the temperature will decrease by several degrees before returning to the set value. This is normal, as is the continuous turning on and off of the heating.

NOTE: During the first hours of use, it is possible that a smell will come from the basin-cover carter slots. The odor is generated by the insulating material applied to the resistances in order to hold the heat inside the basin. This smell is not toxic and will disappear after a short time.

Ironing Basin Movement

Pushing the pedal starts the rotation of the roller in the working direction and the ironing basin lowers to apply pressure on the roller (movement delay for models /30). To return the basin to home position, push the pedal to move the basin upwards while the roller turns in the opposite direction from the working one (/25 only). While the basin lifts up to come back to its upwards position, it is possible to invert the driving direction even if the maximum height has not been reached yet. This allows a much higher working speed.

NOTE: After 20 minutes without the pedal being pushed, the machine turns off automatically to reduce energy consumption to the minimum level. The basin will automatically return to its home position and the only signal on the control panel will be the yellow LED on the STOP button.

Speed Adjustment (Optional)

Speed adjustment is possible by pressing the up and down arrow buttons on the control panel. There are 7 preset speed values between ~6 and 13 ft/min [2 and 4 m/min]. These can be set while the speed is working. Value 1 corresponds to the minimum speed while value 7 corresponds to the maximum speed. The driving speed adjustment allows for versatility in relation to the different types of fabric to be ironed and the residual humidity content.

End of the Working Session

Once operations are completed it is recommended to let the roller continue moving for several minutes with the ironing basin at a low temperature (122°F [50°C]) to remove the residual moisture from the casing. To turn off the machine, press “STOP”. If the basin is in the home position, the machine turns off normally. If the roller is rotating, the basin is first lifted and then the machine stops. To complete the switch-off, activate the isolating switch on the machine and the automatic one on the wall to cut-out the power supply to the machine.

Coin Operation

In this particular configuration, commissioning of the machine is performed by inserting a coin that enables machine operation for a duration that can be set by 10 minute steps. Once the set time elapses, the machine will turn off. Modes of deactivation are the same as a deactivation achieved by pressing STOP, but they are automatically performed without any intervention required on devices. In order to set a value other than the default one, follow the instructions attached to these special models.

CAUTION

NEVER leave the ironing basin at high temperature in direct contact with the roller as this is dangerous during the periods when the machine is enabled but not in use.

W1046

IMPORTANT: The emergency stop button is NOT to be used to turn off the machine except in cases of real danger for the user.

Recommendations for Using the Machine

Divide garments to be ironed according to their composition and begin ironing with those that require a lower temperature. Gradually increasing the temperature, which can be set on the control panel, iron the most heat resistant garments. This allows work to begin earlier and avoids having to wait for the ironing basin to cool before ironing more fragile fabrics. For best results, garments to be ironed should have a relative humidity content of 10 to 20%. For machines with metallic spring casing, this range increases from 10 to 40-45% thanks to the extraction and the possibility of adjusting the driving speed. Refer to *Table 12* for the temperatures to be set for the different types of fabrics and the symbols generally used in the textile industry: These symbols are generally available on the labels of fabrics in an iron.

FWF2401N_SVG	Ironing temperature cannot be higher than 230°F [110°C]
FWF2400N_SVG	Ironing temperature cannot be higher than 302°F [150°C]

Table 12 *continues...*

FWF2399N_SVG	Ironing temperature cannot be higher than 392°F [200°C]

Table 12

NOTE: Garments processed with starch should be ironed last.

NOTE: For safety reasons, the machine is limited to a maximum temperature of 356°F [180°C]

WARNING

Use the entire surface of the ironing roller by varying the areas used during the cycle. Using the same area repeatedly leads to quick degradation of the roller cover as well as overheating of the ironing plate in the unused area. Fire hazard!

W1047

Refer to *Figure 15* for how to properly vary the area of use of the ironing roller.

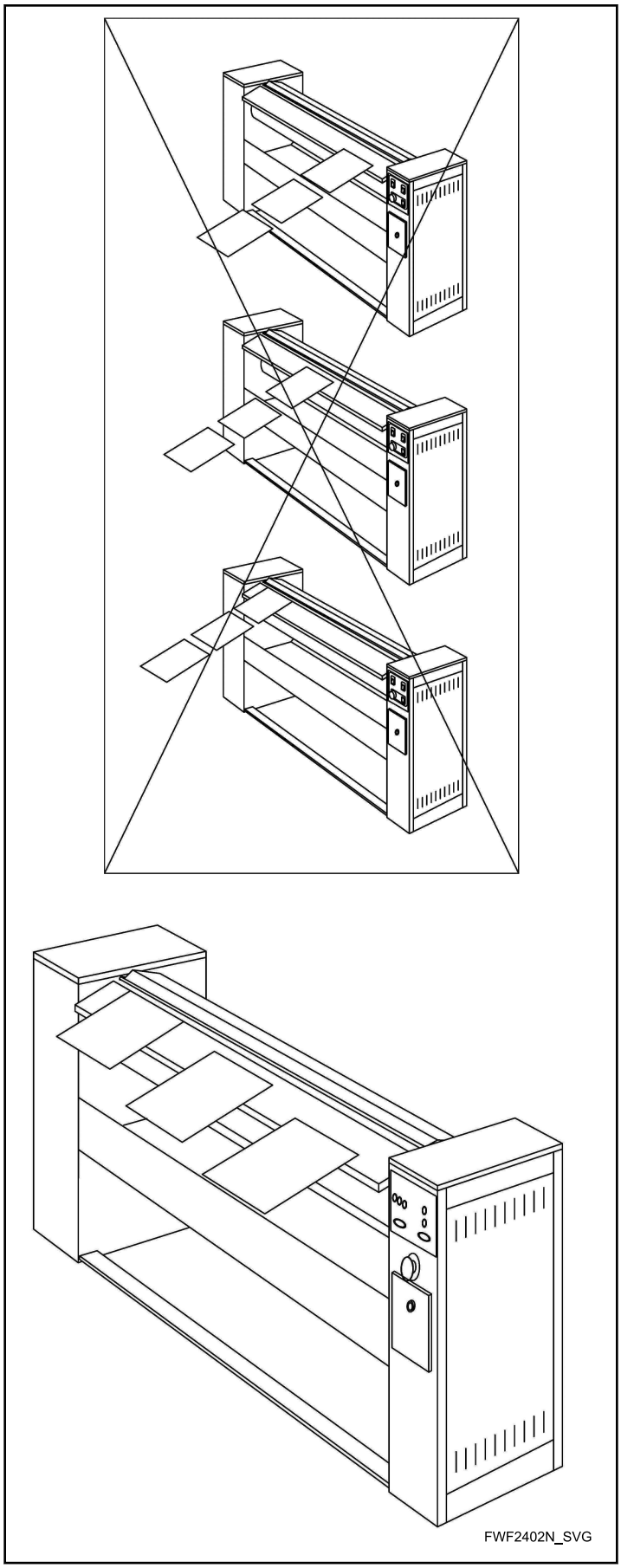

Figure 15

When START is pressed, the green lamp turns off, which indicates that the machine is ready to be used. Select the desired temperature by proceeding as described above. Once the set temperature is reached (with the ironing basin in home position), start ironing by preparing the garments on the wood feeding table and pushing the pedal to make the roller rotate and the ironing basin lower. The roller automatically drives the garments under the basin, mitigating the risk of burns. These garments will be then recovered in the collection tank once their ironing is completed. Pushing the pedal again lifts the ironing basin and it is then possible to iron another garment.

For ironers fitted with speed adjustment devices, it is possible to iron particularly difficult fabrics by decreasing the driving speed from ~6 to 13 ft/min [4 to 2 m/min] .

The operation of models equipped with extractors does not differ from the description above, except for the humidity content of the garments to be ironed, which can be far higher. In order to minimize the energy consumption of your laundry, it is recommended to prepare the garments for ironing with a relative humidity between 10 and 20% up to 25% or more for models equipped with extractors; with lower humidity contents, creases could be present, which are difficult to iron and require the fabric to be moistened and ironed several times.

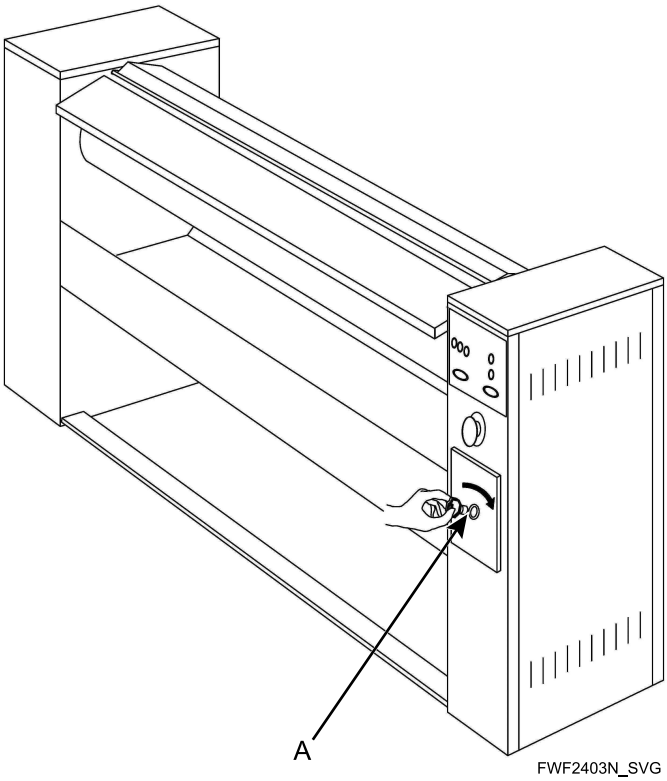

- A: Use plastic key to remove emergency door

Figure 16

In Case of Power Failure

Deactivation of Basin and Garments

If there is a power failure during normal use of the machine, the trapped garments in prolonged contact with the hot plate can become a fire risk.

To lift the basin and release the trapped garments:

1. Position the disconnector on “0”.
2. Use the plastic key provided and remove the emergency door (A) (refer to *Figure 16*).
3. Manually turn the basin driving motor clockwise (B) (refer to *Figure 17*) to detach the basin from the roller:
4. Release the trapped garments and continue detaching the basin until it is at least 20 mm from the roller.

NOTE: Some models have an emergency door on the other side. Use the same procedure to move the basin.

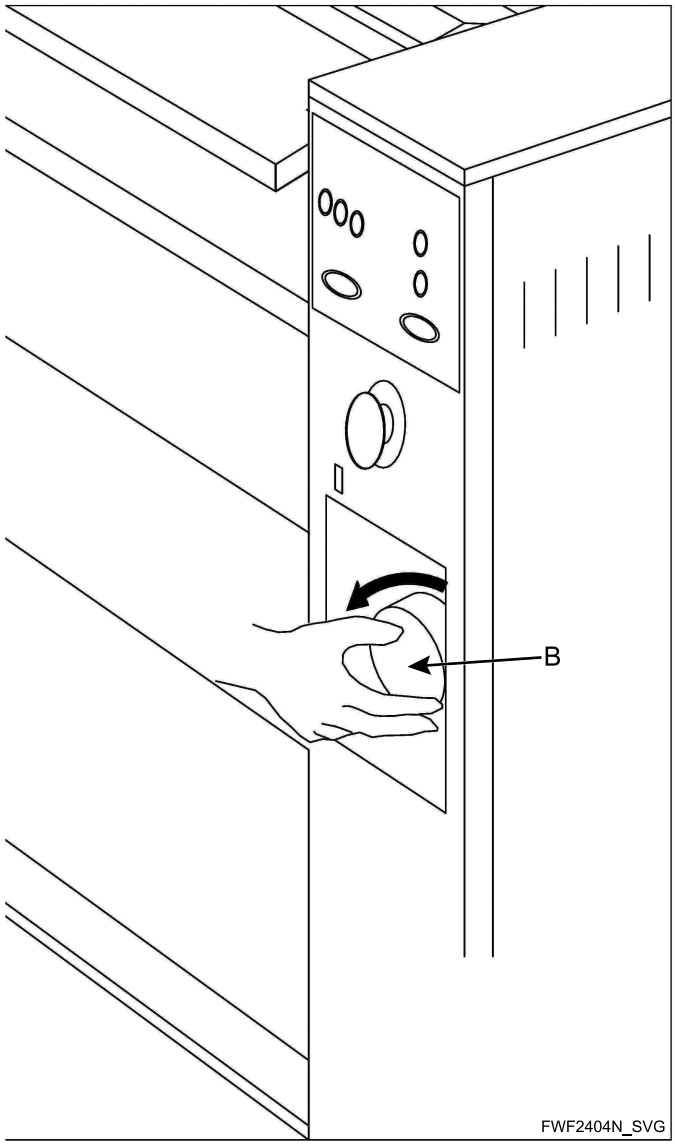

- B: Turn the basin driving motor clockwise

Figure 17

CAUTION

The outlet edge of the ironing basin is as hot as the ironing basin itself. Burn hazard during the withdrawal of treated garments!

W1048

CAUTION

Do not leave garments inserted or entangled in the stopped ironer: fire hazard! In case of failure or power cut, release the garments from the ironing plate.

W1049

If a Person Becomes Trapped

If a person becomes entrapped in the machine, press the emergency stop button immediately. Release the emergency stop button to return the basin to the rest position. Disengage the person and any linen present. In the event of entrapment of the person and subsequent disconnection of the power supply, follow the procedure outlined in *In Case of Power Failure*.

Ergonomics

The right working angle between the operator's forearm and arm during working is close to 90°; for particularly small operators, install a platform under the operator's feet that facilitates the achievement of the correct angle; for very tall operators slightly lift the machine by means of an appropriate rigid platform to allow for correct ergonomics. Working in the right position ensures a higher quantity of the ironed product and a better ironing. Use the feeding table to prepare the garments and insert so as to avoid weariness and avoid the burn injury hazard.

Suggestions

- Do not keep the machine on if it is not necessary. TURN OFF the main cutout switch when the machine is not being used.
- During operation, remember:
  - When the machine is left on at rest for over 20 minutes it will turn off automatically and consequently save energy. To start the machine again, just press the START push button and repeat the steps outlined in *Operation*.
  - Mind your hands when introducing clothes.
  - In case of a black-out when the basin is down on the roller, open the emergency door quickly and raise the basin by turning the ad-hoc hand-wheel clockwise, thus avoiding burns to both the garments and the roller cover.
  - Before carrying out any cleaning or maintenance, make sure that both the built-in cutout switch and the wall cutout switch are off.
  - When the machine is not being supplied with power, the yellow lamp on the STOP push button is off.
  - Do not iron garments which have been cleaned, dampened, or washed with flammable or explosive substances unless they have been washed in water beforehand.
  - Keep flammable chemical agents far from the machine. Store them in dry and aired compartments, inaccessible to unauthorized personnel.
  - Keep the machine's cleaners and polishers far from the ironer itself.
  - Read and comply with all warnings.

Routine Maintenance and Cleaning

Additional Safety Instructions for Maintenance

The machines must undergo regular technical maintenance, and any detected defect which can jeopardize workers' health and safety must be eliminated immediately.

IMPORTANT: Maintenance operations must be performed by qualified, authorized personnel.

From an operational point of view, maintenance operations can be divided in two main categories:

- **Routine maintenance:** All those preventive operations that the operator must carry out to ensure the smooth operation of the machine over time.
- **Extraordinary maintenance:** All those operations that the operator must perform on the machine when required (breakage, malfunctions, ...).

CAUTION

Before performing any maintenance work:

- **Disconnect power from the machine and wait for 10 minutes before intervening**
- **Disconnect all other supply sources such as steam/condensate drain**
- **Check that mechanical components are not moving**
- **Check that the temperature of all machine components is below 40°C**

W1050

If the person performing maintenance work is not visible during power disconnection, people who are not aware of maintenance work being performed can power the appliance or accidentally start a cycle. In order to avoid any danger, it is necessary to affix warning signs indicating “Machine under maintenance” and lock or prevent interventions on the electric disconnectors in “0” or “OFF” position.

Each procedure described in this manual must be accompanied by the required PPE.

After performing maintenance work and prior to re-commissioning the appliance, it is necessary to:

- Make sure that any replaced part and/or the tools used for maintenance have been removed from the machine
- Check the emergency devices
- Carefully inspect the machine before operating it again, and make sure all panels have been reassembled and returned to their correct places

IMPORTANT: The machine parts must only be replaced with original parts supplied by the manufacturer.

Routine Maintenance

To ensure proper operation of the machine, regular and preventive checks and maintenance work must be carried out according to the tables provided and the maintenance schedule indicated therein.

Failure to observe the above exempts the manufacturer from any liability/warranty.

The intervals indicated refer to normal operating conditions, i.e. in line with the expected and contractually established operating conditions.

IMPORTANT: The personnel in charge of maintenance activities must be authorized and trained in the safety and operational standards required and must understand the dangerous situations that may arise and the correct methods for avoiding them.

Verification Table

Operation	Frequency			
	Daily	Monthly	Quarterly	Yearly
Check that the safety systems are activated and working by intentionally activating the finger-safety fillet and emergency stop.	X			

Table 13 *continues...*

Operation	Frequency			
	Daily	Monthly	Quarterly	Yearly
Check that there is no damage, such as scratches, abrasions, or similar on the ironing plate.	X			
Check that no garments, fabric pieces, or other objects are left in the basin or on the roller.	X			
Check to make sure there are no signs of wear or anomalies on the roller surface.	X			
Check that the basin moves correctly both while descending and lifting.	X			
Check the circumference of the roller (refer to *Roller Circumference*).		X		
Wash the outer casing of the roller with a delicate water cycle (104°F [40°C]).			X	
Check the gearing chain tension.			X	
Make sure that the contacts on the contactor terminals and on the other live terminals are tightened correctly.			X	
Check the tightening moments of the screws.			X	
Check the seal of all the hoses and connections inside the machine.			X	
Check that there are no leaks in the gas springs pressing the basin.			X	
Check that the gearbox does not have any lubricant leaks.			X	

Table 13 *continues...*

Operation	Frequency			
	Daily	Monthly	Quarterly	Yearly
Check the earthing of all mechanical parts: pay attention to parts subject to movement (basin and related gears).				X
Lubricate the gearing chain and all other moving parts.				X

Table 13

Roller Circumference

Efficient operation is achieved when the roller and the ironing basin are perfectly coupled. Since the roller casing is subject to wear and/or compression, it is necessary to check that the roller size is compatible with the ironing plate, which typically means free from visible wear. Under normal conditions, the roller circumference, which can be measured using a measuring tape, is to be between 35 and 36 in [890 and 910 mm] , and the measurement is to be the same all along the roller length. On a new machine, slightly higher measurements are allowed, which will be within the typical values after a first period of adjustment. Should the measured circumference be below 35 in [890 mm] , it will be necessary to restore the casing by adding the required quantity of steel wool and replacing the melton (or sheet) that is located on the outside, if needed. Refer to the relevant instructions for extraordinary maintenance.

Tightening Torques

Standard tightening torques are used on the machine, except torques specified in *Table 14* .

Screw	Tightening Torque
Frame fixing screws	M6 - 9 Nm

Table 14 *continues...*

Screw	Tightening Torque
Rack screws	M5 - 4 Nm
Contactor terminals clamping screws	8.8 Nm
Gearbox screws	M8 - 20 Nm
Side doors closing screws	Manually

Table 14

Gearing Chains Tensioning

NOTE: If the chain is too tensioned, it becomes worn quickly.

Replace the chain if worn. Contact the Authorized After-Sales Center for replacement.

Cleaning

The machine must be kept clean. Regular cleaning reduces the risk of breakdowns and accidents.

Refer to *Table 15* for the main cleaning operations that must be performed.

Operation	Frequency			
	Daily	Weekly	Monthly	Quarterly
Clean the feeding table.	X			

Table 15 *continues...*

Operation	Frequency			
	Daily	Weekly	Monthly	Quarterly
Clean the pressure roller ribbon (optional) from fabric residues.	X			
Clean detergent stains from the outer surface of the machine.	X			
Clean fluff out of the collection tank.	X			
Clean the cladding panels.			X	
Clean the cooling slots.			X	
Clean the basin and wax it using the special sheet and following the instructions provided by the supplier of the wax.			X	
Clean the steam exhaust pipe.				X

Table 15

CAUTION

Cleaning should occur while the machine is stopped and cooled. Do not clean the machine while it's working.

W1051

CAUTION

Keep the space around the machine clean. Keep the machine away from flammable materials.

W1054

CAUTION

Do not use flammable or abrasive products.

W1052

CAUTION

Never use direct jets of water to clean the machine.

W1053

Troubleshooting and Repairs

Troubleshooting of Common Issues

The following information is intended to assist you in identifying faults and restoring machine functionality and efficiency.

Malfunctions or Fault Messages

CAUTION

The interventions to the machine must be carried out by a qualified installer trained by the manufacturer, in the presence of an electrical technician able to make the electrical connections required.

W1055

CAUTION

Disconnect the power supply before any maintenance operation.

W1056

AL1 Overheating or Faulty Probe

If a temperature above 410°F [210°C] is detected or if the temperature probe is faulty, disconnected, or interrupted, the AL1 alarm flashes on the display and the buzzer sounds intermittently for one minute.

The machine remains turned on in the error condition until the anomaly is corrected. It returns to normal operation as soon as the temperature decreases below the alarm level.

If the probe is faulty, the alarm cannot be reset until the sensor is replaced. The AL1 alarm reset is completed by disconnecting and reconnecting the power supply by means of the isolating switch on the machine.

AL2 Extractor Circuit Breaker (Only on Relevant Models)

This alarm indicates that the circuit breaker of the extractor motor has tripped. The alarm message is shown on the display and the buzzer sounds for one minute. It is not possible to continue ironing as the machine returns automatically to its home position.

Check the integrity of the electric motor and its cleaning: if the motor is faulty, replace it. Reset the circuit breaker.

The AL2 alarm reset is completed by disconnecting and reconnecting the power supply by means of the isolating switch on the machine.

AL3 Basin Motor Circuit Breaker (Only on Models with Two Motors)

This alarm indicates that the thermal protection of the basin motor has be activated. The alarm message is shown on the display and the buzzer sounds for one minute. It is not possible to continue ironing as the machine turns off automatically.

Check the integrity of the electric motor and its cleaning: if the motor is faulty, replace it. Reset the thermal protection.

The AL3 alarm reset is completed by disconnecting and reconnecting the power supply by means of the isolating switch on the machine.

AL4 Roller Motor Circuit Breaker

This alarm indicates that the the roller motor circuit breaker has been tripped or there is an error to the speed adjustment inverter. The alarm message is shown on the display and the buzzer sounds for one minute. It is not possible to carry on ironing as the machine turns off automatically.

Check the integrity of the electric motor and its cleaning: if the motor is faulty, replace it.

Reset the circuit breaker. Should the cause of the alarm be the activation (inverter), check that connections of the signals on the terminal board are correct. Refer to *List of Inverter Error Codes* for inverter error codes.

List of Inverter Error Codes

Each AL4 error (roller motor protection) is accompanied by the inverter error code signal. Refer to *Table 16* for the codes and their meanings.

Code	Description
SA	The connections between terminals S1, S2, SC on the inverter terminal board have been removed or loosened: short-circuit these terminals together.
ESAF	A connection between the S1-SC or S2-SC terminals on the inverter terminal board has been removed: short-circuit these terminals together.

Table 16 *continues...*

Code	Description
Uv	The power supply voltage to the inverter is too low: check the supply voltage or the connection of the transformer to the terminal relevant to the voltage present on the network.
Ov	The power supply voltage to the inverter is too high: check the power supply voltage or the connection of the transformer to the terminal relevant to the voltage present on the network.
E.LF	Lack of output phase: check the connection of the electric cable between the inverter and the electric motor.
THT	Inverter overload: consult the manufacturer to make sure the parameters are set correctly. If the problem persists, replace the drive.
OC	Inverter overcurrent. Check that there are no short circuits at the drive output and consult the manufacturer to make sure the parameters are set correctly. If the problem persists, replace the drive.
THM	Motor overload: consult the manufacturer to make sure the parameters are set correctly. If the problem persists, replace the drive.

Table 16

AL5 Safety Door

If the front safety guard is opened while the machine is working, this flashing error message is displayed. The machine is automatically turned off without returning the ironing basin to its home position.

To reset the alarm it is necessary to properly reposition the guard (door). The alarm is active even if the machine is powered (with only the yellow lamp on). If the alarm persists despite repositioning the guard, check that the relevant micro-switch functions correctly.

AL6 High Basin Time Out

This alarm indicates that the home position of the basin has not been reached in 10 seconds. If the pedal is pushed and the basin does not reach its home position in 10 seconds, this alarm is displayed and the buzzer sounds.

The machine is automatically turned off and it is necessary to turn it on again to reset this condition.

Check that the mechanical gear (chain, gearbox, motor) and the limit micro-switches function correctly.

AL7 Low Basin Time Out (Only on Models with 2 Motors)

This alarm indicates that the working position of the basin (low basin) has not been reached in 10 seconds. If the pedal is pushed and the basin does not reach its working position in 10 seconds, this alarm is displayed and the buzzer sounds.

The machine is automatically turned off and it is necessary to turn it on again to reset this condition.

Check that the mechanical gear (chain, gearbox, motor) and the limit micro-switches function correctly.

Other Faults

The Machine does not Heat

Check the intervention of the safety thermostat(s). If the temperature of the ironing plate is above 455°F [235°C] , the circuit breaker intervenes by permanently deactivating the heating. Stop ironing, wait for the basin to cool and reset the circuit breaker, which is protected by the screw cap on the rear part of the machine.

When resuming operation, use the entire width of the ironing roller.

If the problem persists, check that the temperature probe is showing the correct reading or consult the manufacturer.

The Machine does not Start

If the machine does not start, check:

- That voltage is present and that the disconnector is set on “1” or “ON”
- Intervention of fuses
- Whether the emergency button pressed
- Whether the circuit breakers activated
- Whether the finger-safety fillet is jammed or the relevant micro-switch is activated, faulty, or defective
- Whether the pedal is jammed pedal or the relevant micro-switch is jammed or defective
- Whether the control panel is disconnected or defective
- Whether the CPCB is faulty
- Whether the gearing is broken

The Machine does not Stop

If the machine does not stop, check:

- Whether the finger-safety fillet is jammed or the relevant micro-switch is activated, faulty, or defective
- Whether the pedal is jammed pedal or the relevant micro-switch is jammed or defective
- Whether the control panel is disconnected or defective
- Whether the CPCB is faulty

Decommissioning and Disposal

Decommissioning

To decommission the machine:

1. While the machine is cooled and rotating, cut the power supply using the disconnector on the machine. The basin will remain tight to the roller.
2. Cut the external power supply to the machine (external disconnector or machine switch).
3. Disconnect the machine from the general plug.
4. While the machine is cooled and stopped: close the steam delivery (if present) and disconnect the fume exhaust pipes.
5. Remove the machine following the transport procedures described in *Transportation, Storage, and Unpacking*.
6. Remove the fuses to prevent the machine from being re-commissioned.
7. Always keep these instructions with the machine so as to facilitate repairs or disposal.
8. Mark the machine as “Out of Order".

CAUTION

Perform all operations while the machine is cooled and with any possible external heat source (e.g. steam) disconnected, if present.

W1057

Disposal

IMPORTANT: In compliance with the standards for waste disposal in force in the installation country, and with a view to safeguarding the environment in which the machine is installed, all machine parts must be divided so as to be properly disposed of and recovered.

Disposal of this machine follows the **WEEE - Waste Electrical and Electronic Equipment - Directive (2012/19/EU).** The purpose of this directive is the prevention of electrical and electronic equipment waste and the reuse, recycling, and other forms of recovery of such waste so as to reduce disposal.

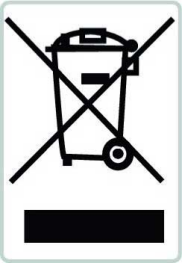

FWF2405N_SVG

Figure 18

Illegal disposal of the product by the user involves the application of administrative sanctions as required by law. In order to properly dispose of the materials that make up the machine, please refer to *Table 17* .

Component	Main Materials	Mode of Disposal
Structural frame	Coated steel plate	Recycle as common steel
Brackets, supports, control panel steel plate	Galvanized steel plate	Recycle as common steel
Resistors	Steel	WEEE - Electric parts
Fan unit	Galvanized steel and copper	Ferrous waste
Electric motors	Aluminum, steel, copper	WEEE - Electric parts
Gearbox	Aluminum, Steel, Bronze, Oil	Used oils*, metal scraps
Runners	IXEF, Copper	Not recyclable
Electric parts	Plastic materials, copper, steel	WEEE - Electric parts
Ironing basin	Aluminum	Recycling of aluminum
Batt insulation	Ceramic fiber	Not recyclable
*In order to remove the greatest amount of oil from the gearbox, let it drain overnight, at least 8 hours. Using this procedure, the residual amount of oil is less than 1% in mass (ex: 1g/kg) and the part is classified as not dangerous. Recycle used oil in the proper and separate manner.		

Table 17

This machine has a recyclability rate higher than 92%.

Recommended Spare Parts and Consumables

Recommended Spare Parts

During its operation, the machine is subject to normal wear of the mechanical and electrical components. To promptly intervene in case of machine failure, we recommend equipping the machine with the following spare parts, divided among parts common to all machines and dedicated parts.

Parts common to machines of different sizes:

- Temperature probe
- Complete I/O relay board
- Emergency stop
- Adhesive membrane
- M6 and M4 screws for panel fixing
- Roller coverings

Parts that depend on the size/capacity of the machine:

- Main transmission unit (chain, crown, pinion)
- Basin lowering transmission unit
- Shock absorbers
- Gas springs
- Electrical resistors kit
- Fuse kit
- Electric motor
- Inverter
- Inverter communication cable

If you are in an area where it is difficult to get spare parts or if it is a priority to restore the machine quickly, we recommend the following additional components:

- Complete bearing set

Machines with steam heating can experience wear on the following components:

- Steam solenoid valve

Refer to the spare parts section in order to identify the correct components for your machine.

Wiring Diagrams

WITHOUT Roller Speed Control and WITHOUT Fan

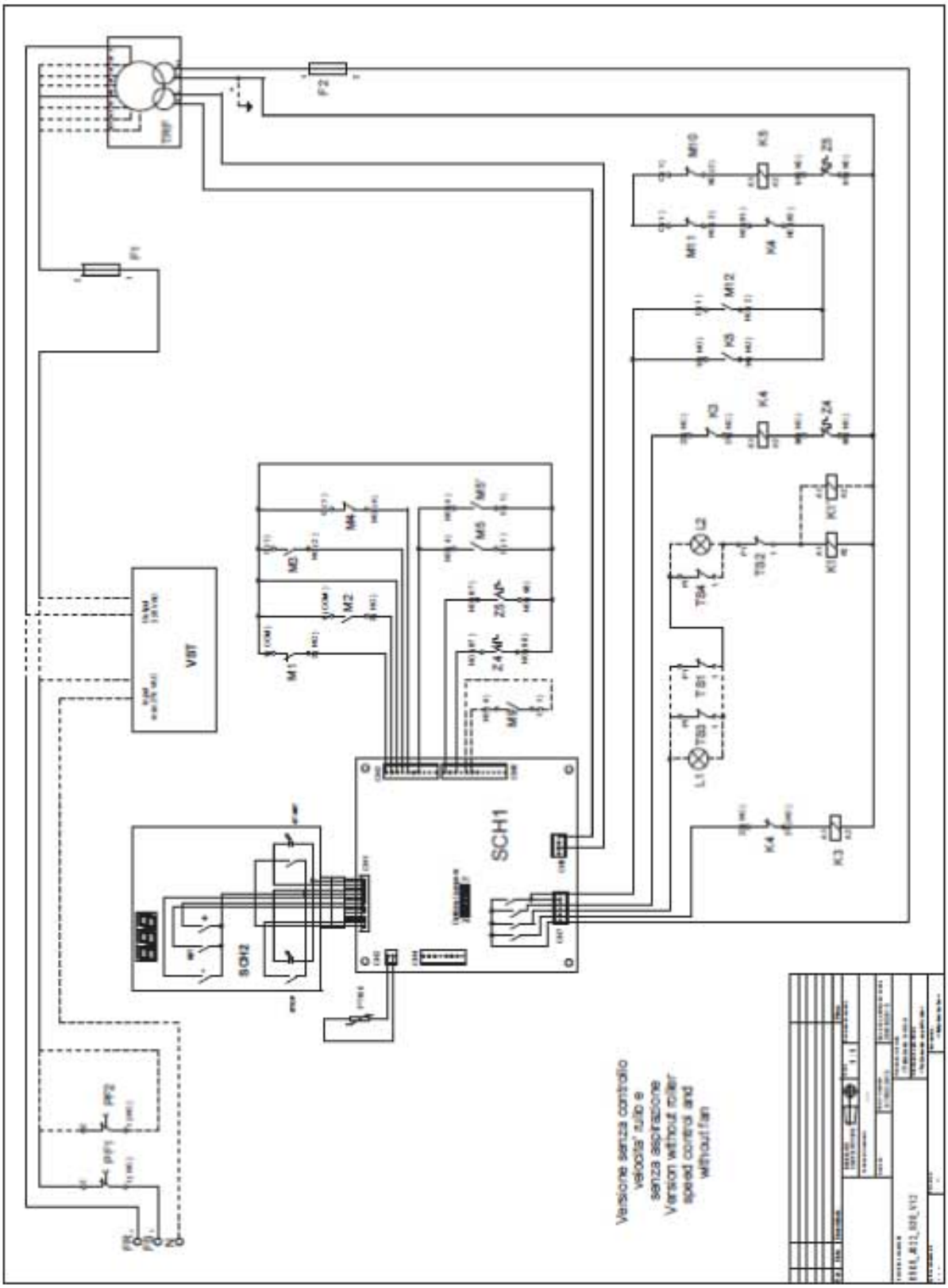

FWF2406N_SVG

Figure 19

WITH Roller Speed Control and WITH Fan

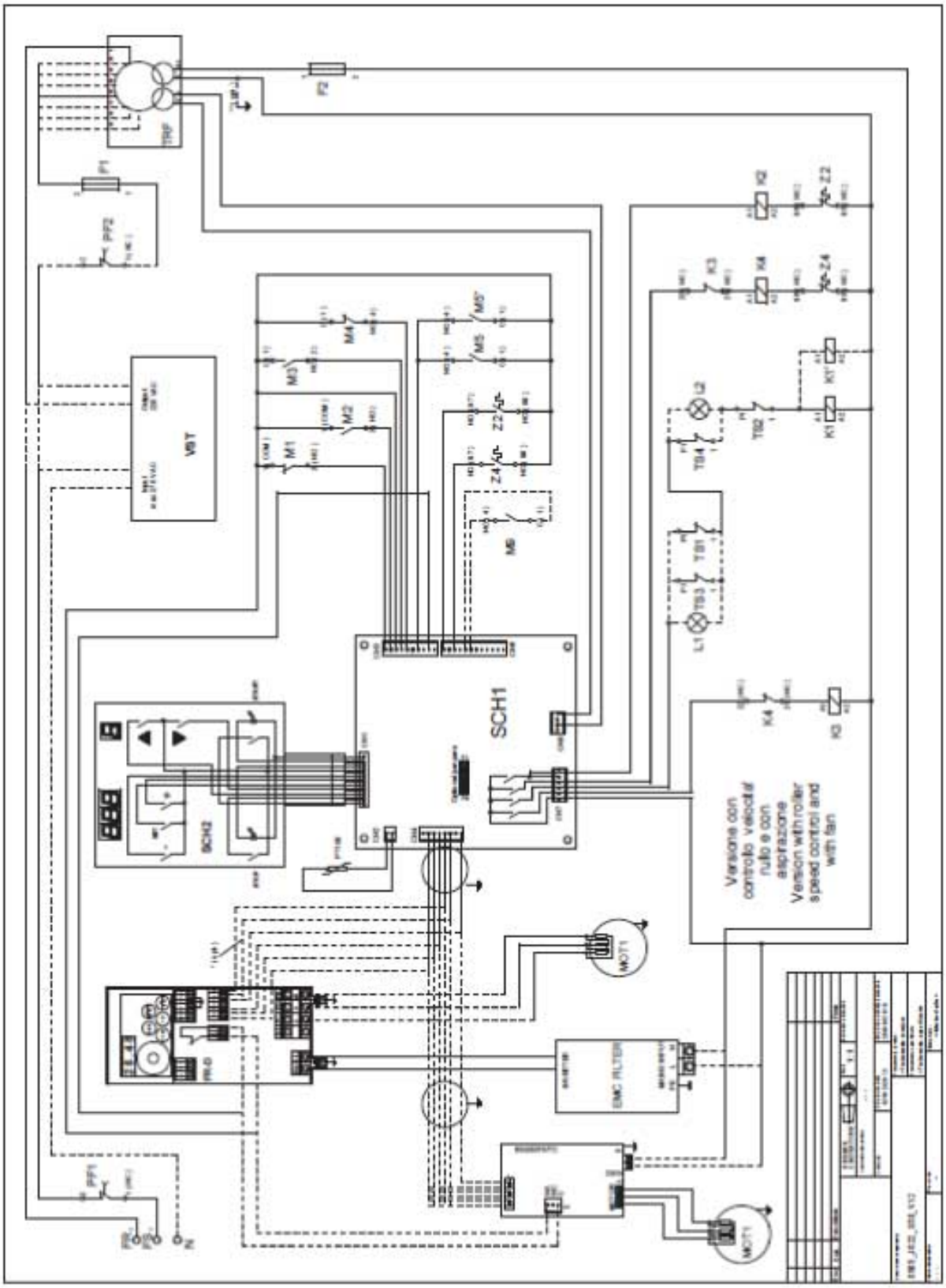

FWF2407N_SVG

Figure 20

WITHOUT Roller Speed Control and WITHOUT Fan

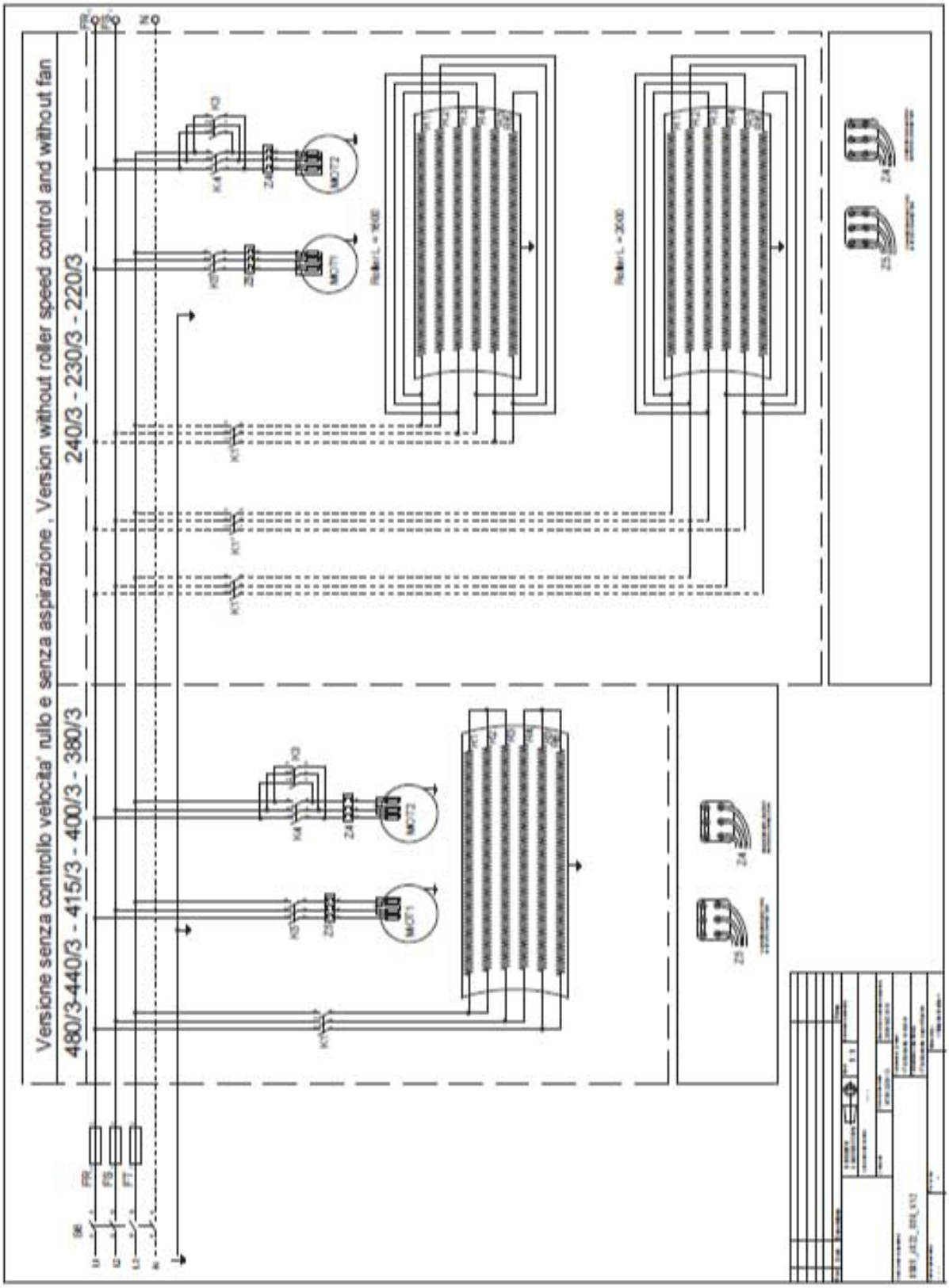

Figure 21

WITH Roller Speed Control and WITH Fan

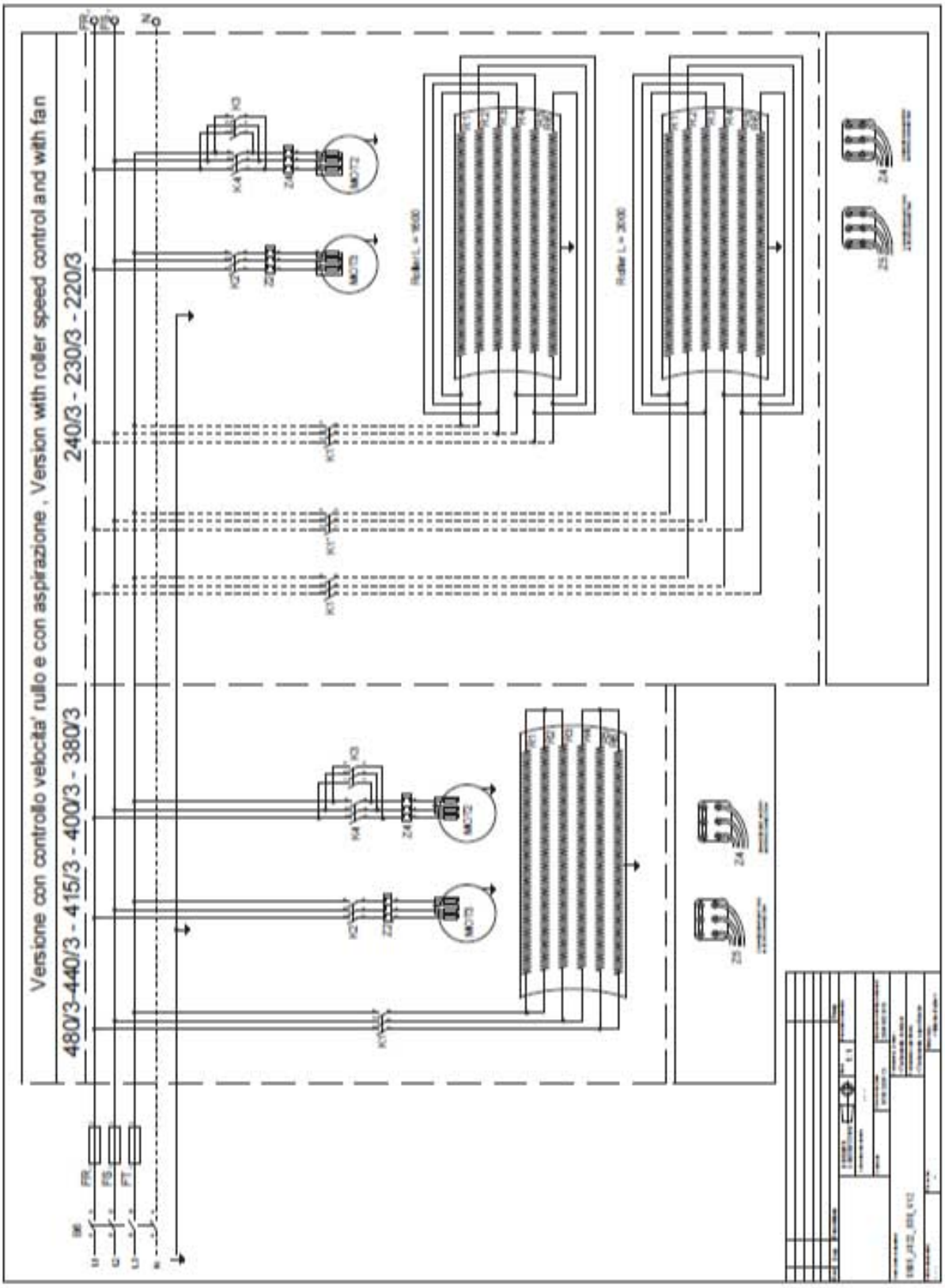

Figure 22

Market Supply, Model			Fuse Table				Table of Heating Contact K1, K1', and Mains Switch B6	
			F1, F2		FS, FR, FT			
			Dimensions	Current	Dimensions	Current	K1, K1'	B6
380-400-415 -440 480 VAC, 3 ph	Roller 160 cm	Without fan and roller speed control	Diam = 10.3 L = 38	2 Amp	Diam = 10.3 L = 38	25 Amp	1pc x LC1D18P7	V1
220-230-240 VAC, 3 ph	Roller 160 cm	Without fan and roller speed control	Diam = 10.3 L = 38	2 Amp	Diam = 10.3 L = 38	40 Amp	1pc x LC1D25P7	V1
380-400-415 -440 480 VAC, 3 ph	Roller 160 cm	With fan and roller speed control	Diam = 10.3 L = 38	4 Amp	Diam = 10.3 L = 38	25 Amp	1pc x LC1D18P7	V1
380-400-415 440 VAC, 3 ph	Roller 200 cm	With fan and roller speed control	Diam = 10.3 L = 38	4 Amp	Diam = 10.3 L = 38	25 Amp	1pc x LC1D18P7	V1
380-400-415 440 VAC, 3 ph	Roller 200 cm	With fan and roller speed control heating power 19Kw (optional)	Diam = 10.3 L = 38	4 Amp	Diam = 10.3 L = 38	32 Amp	1pc x LC1D18P7	V1
220-230-240 VAC, 3 ph	Roller 160 & 200 cm	With fan and roller speed control	Diam = 10.3 L = 38	4 Amp	Diam = 10.3 L = 38	40 Amp	2pcs x LC1D25P7	V3
380-400-415 VAC, 3 ph	Roller 160 & 200 cm	Steam heated, with fan and roller speed control	Diam = 10.3 L = 38	4 Amp	Diam = 10.3 L = 38	10 Amp	-	V1

Table 18

Jumper Options		
	Open	Closed
P1	25 cm roller diameter	30 cm roller diameter
P2	Stainless steel heated pressing plate	Aluminum heated pressing plate

Table 19 *continues...*

Jumper Options		
	Open	Closed
P3	Not used	Not used
P4	Not used	Not used
P5	Not used	Not used

Table 19 *continues...*

Jumper Options		
	Open	**Closed**
P6	Single press pedal function	Double press (push-push) pedal function

Table 19

Market Supply	Thermal Relay Settings		
	Z2	**Z4**	**Z5**
220-230-240 VAC 3 ph, 50 Hz	0.8 Amp	1.8 Amp	1.8 Amp
220-230-240 VAC 3 ph, 60 Hz	0.8 Amp	1.8 Amp	1.8 Amp
380-400-415-440 480 VAC, 3 ph , 50 Hz	0.8 Amp	0.8 Amp	0.8 Amp

Table 20

Component Legend	
B6	Mains switch
EMC FILTER	Radio interference filter
EN05007NTC	Entity inverter
F1	Primary coil transformer fuse
F2	Secondary coil trnasformer fuse
FR-FS-FT	Power supply fuse
FR-D	Mitsubishi inverter
K1-K1'	Heating contactor
K2	Fan contactor
K3	Thermostat lamp (optional)
K4	Pressing plate contactor (press)
K5	Pressing plate contactor (remove)
L1-L2	Roller contactor

Table 21 *continues...*

Component Legend	
M1	Pressing plate trip switch (high)
M2	Pressing plate trip switch (pressing)
M3	Pedal switch
M4	Emergency door switch
M5-M5'	Finger bar switch
M9	Coin mechanism switch (self)
M10-M11	Finger bar switch
M12	Pedal switch
MOT1	Roller motor
MOT2	Pressing plate motor
MOT3	Fan motor
PF1-PF2	Emergency push button
PT100	PT100 temperature probe
R1-->R6	Heating elements
SCH1	Display-control board
SCH2	Control pad
TFR	Transformer
TS1-TS2	Limit thermostat manual reset
TS3-TS4	Limit thermostat automatic reset (opt.)
VST	Voltage stabilizer
Z2	Fan motor thermal relay
Z4	Pressing plate motor thermal relay
Z5	Roller motor thermal relay
*(opt.)	STR connection optional on inverter
**(opt.)	Hearth optional connection

Table 21